COOKWARE MANUFACTURERS ASSOCIATION

Representing the Industry since 1922

®*

ENGINEERING STANDARDS
FOR
COOKWARE & BAKEWARE

Revised December 2012

COOKWARE MANUFACTURERS ASSOCIATION
P. O. BOX 531335, MOUNTAIN BROOK, AL 35253-1335
Phone: 205-823-3448 Fax: 205-823-3449
www.cookware.org hrushing@usit.net

FORWARD

The Cookware Manufacturers Association (CMA) is a National Trade Association, whose purposes, as defined in the by-laws, are to promote the welfare of the cookware industry, to improve its services to the public and generally to carry out activities in furtherance of the industry consistent with the public interest and recognized as lawful for trade associations.

One such activity is the establishment of voluntary standards for the products manufactured within this Industry. Standards as established are intended as a guide to aid the manufacturer, the user and the general public. The existence of these CMA Standards does not preclude anyone, whether they approved the standard or not, from not complying if it is in his best interest to do so.

Manufacturers of products made in conformity with CMA Standards are encouraged to state in advertising, promotional materials or on tags or labels, that the products are produced in conformity with established CMA Standards. Members are authorized to use the association's registered mark shown on the cover of this standard. Contact the CMA office for further information

Revision Notes
Edition Revised April, 2005, *Ad hoc* Engineering Standards Committee
Adopted unanimously by the CMA Board of Directors, April 13, 2005
Running changes approved and inserted in sections 2.2.1, 3.3.1 and 3.3.2 February, 2006.
Silicone Bakeware Standards and Appendix E formulated by ad hoc committee January, 2007
Chapter 22 adopted unanimously by the CMA directors, February, 2007
Revision to 7.9 unanimously adopted by CMA directors February, 2010
Revision to 3.3.5 unanimously adopted by CMA directors April, 2011
Revisions with multiple changes adopted by CMA directors December, 2012
A current list of the Association's membership is available at www. cookware.org/membership.php

TABLE OF CONTENTS

DEFINITIONS

1 DEFINITION OF INDUSTRY PRODUCTS

1.1 TOP-OF-RANGE METAL COOKWARE (NON-ELECTRIC)

The term top-of-range cookware refers to those products used for foods which cook by direct contact with the heat source (direct heat). Family needs and common household usage determine cookware sizes. For best cooking results and efficient use of energy, the base dimension should relate to the diameter of the heating element or burner of household ranges.

1.1.1 BLANCHER AND STEAM COOKER - A covered utensil similar to a saucepan but with a perforated insert so that the food placed in the insert is raised above a small amount of water in the pot and is cooked by steam.

1.1.2 CANNER - A covered cooking utensil with a wire insert rack for jars that permits convenient handling. Generally used for canning fresh meats and vegetables. Available in 11 to 36 quart (10.41 to 34.07 liters) capacity. Must have 2 to 3" (5 to 8 cm) of headroom above the jar lid.

1.1.3 CHICKEN FRYER - A chicken fryer is a deep, covered fry pan or skillet.

1.1.4 COFFEE MAKER - Available in sizes 2 to 36 cups (295.74 milliliters to 5.32 liters). Used for making coffee by the percolated drip, vacuum, boiling or other methods. Capacity shall be stated in terms of the number of 5 fluid ounce (150 milliliters) portions, or both.

1.1.5 DOUBLE BOILER - A double boiler consists of two saucepans or a saucepan and a saucepot, each with a handle or side handles, and so made that one pan may be inserted in the other. It shall be equipped with one cover. Capacity shall be indicated for each of the two containers.

1.1.6 DOUBLE FRY PAN OR FOLDING OMELET PAN - A double fry pan or folding omelet pan consists of two shallow rectangular or semicircular pans attached by hinges, one acting as a cover for the other. Each pan shall be equipped with one handle

1.1.7 DUTCH OVEN - Similar to saucepot. Usually comes with a dome cover and a trivet. Sometimes is heavier gauge material. Used for braising and slow cooking of meats. Available in sizes 2 to 9 quarts (1.9 to 8.52 liters).

1.1.8 EGG POACHER - An egg poacher is an insert device with cutouts that accommodate shallow cups, or it may be a covered pan with such an insert device.

1.1.9 FRENCH FRYER - A French fryer is an uncovered cooking utensil with a perforated, meshed or sieve-like insert basket with one handle.

1.1.10 FRENCH OMELETTE OR CREPE PAN - A French omelet or crepe pan is a shallow, uncovered pan with sloping sides and having one long handle. The size of an omelet pan shall be stated by the top diameter in inches (centimeters); the size of a crepe pan shall be stated by bottom diameter in inches (centimeters).

1.1.11 GRIDDLE - Utensil with one long handle, two side handles or bail handle or no handle, with a wide bottom and shallow side wall. Ideal for pancakes, hamburgers, etc. Griddles are available in round, square or oblong shapes.

DEFINITIONS

1.1.12 KETTLE – Covered or not covered utensil with a bail handle across the top for easier lifting. May sometimes have a helper handle. Used for large quantity cooking of stews, vegetables, etc. Available in sizes 6 to 24 quarts (5.68 to 22.71 liters).

1.1.13 OMELET PAN - A shallow uncovered pan with sloping sides and having one long handle. Sometimes known as a Chef's pan. Larger sizes may also include a helper handle.

1.1.14 PRESSURE COOKWARE - Utensil with air-tight cover that permits steam pressure of 5 to 15 pounds. Usually 4 quarter (3.79 liters) capacity, but also available up to 20 quart (18.93 liters) capacity. Ideal for speeding up cooking time for vegetables, soups, meats, etc.

1.1.15 SAUCE POT/STOCK POT - Utensil with two side handles. Available in sizes 2 to 24 quarts (1.89 to 18.93 liters). Generally used for same foods as a saucepan but in larger capacities. A sauce pot is generally wider in diameter than a stock pot of equivalent capacity.

1.1.16 SAUCEPAN - Utensil with one long handle. Some also have a side handle, which is commonly called a "side handle", "side assist handle", or "helper handle"). Capacities range from ⅝ to 4 quarts (59 milliliters to 3.79 liters). Generally used for cooking vegetables, cereals, puddings, sauces, etc. Saucepans are available with or without cover

1.1.17 SAUTÉ PAN – A straight sided frying style pan. Larger sizes may also include a helper handle. The size may be stated in capacity of liquid measurement or by the top diameter in inches (cm).

1.1.18 SKILLET OR FRY PAN - Utensil with one long handle, (some have a long handle and a side handle), a wide bottom and rather shallow sides. Skillets or fry pans are available with and without cover. Used for frying meats, eggs, pancakes, etc. Available in sizes 6 to 14" (15 to 35 cm) in regular and sauté shapes.

1.1.19 TEA KETTLE - A teakettle is a covered utensil having one handle and equipped with a spout or pouring lip. Available in sizes 2 to 8 quarts (1.89 to 7.57 liters).

1.1.19a Tea maker - A utensil used for making tea by the "steep" method.

1.1.20 WINDSOR PAN/SAUCIER PAN- Utensil, usually with one long handle, similar to a sauce pan, but sometimes with two strap handles, with a conical shape with straight side walls. The saucier usually has slopped walls. Primarily used to reduce various sauces to thicker consistencies. The most common size is 2 quarts. Four quart sizes may be found in commercial applications.

1.2 SPECIALTY WARE

1.2.1 ASPARAGUS STEAMER - An asparagus steamer is a tall round or rectangular utensil having a perforated insert. It is equipped with two side handles and one cover. The capacity of the round steamer shall be stated in liquid measurement; the size of a rectangular steamer shall be stated in length, width and depth in inches (centimeters).

DEFINITIONS

1.2.2 ASPIC MOLD – A small round or oval pan, sometimes with decorative depressions molded within it, designed for use in gelatin-based recipes. Typical measurement is by top diameter in inches (centimeters).

1.2.3 AU GRATIN PAN - An au gratin pan is a shallow pan with tapered sides and two side handles. It may be round or oval and is designed for cooking and serving use. The size of an au gratin pan shall be stated by the top diameter in inches (centimeters).

1.2.4 BARBEQUE COOKWARE - Cookware items specifically manufactured for use on either gas, electric or charcoal grills. These items typically have surface finishes that can withstand higher temperatures than traditional cookware or bakeware.

1.2.5 BEAN POT - A bean pot is a deep covered utensil with two side handles in which food may be baked or served. The capacity of the bean pot shall be stated in liquid measurement.

1.2.6 CAMP OVEN - A legged pot, usually of cast iron, intended for use with an open fire, features a rimmed lid that can be covered with coals. Sizes range from 1 to 14 quarts (.95 to 13.2 liters).

1.2.7 CHAFING DISH - A chafing dish consists of an upper pan, usually having one long handle; a lower pan, usually having no handles; one cover; a stand; a source of heat. It is designed for cooking, warming and serving at the table.

1.2.8 CLAM STEAMER - A clam steamer consists of a bottom pot with side handles and a faucet, a top pot with side handles and a perforated bottom, and a cover. It is especially designed for steaming clams. The capacity of a clam steamer shall be stated in liquid measurement.

1.2.9 COQUILLES SHELL - A coquilles shell is a small scallop shell having a deeply fluted and delicately ringed underside. It is designed for baking and serving creamed fish mixtures. The size of a coquilles shell shall be stated by length and width in inches (centimeters).

1.2.10 CORN STICK PAN - A corn stick pan is a tray-like utensil containing a number of suspended individual depressions resembling an ear of corn. The length of the depressions of a corn stick pan shall be stated in inches (centimeters).

1.2.11 FISH STEAMER - A fish steamer is a long rectangular utensil having a perforated lifting rack. It is equipped with two side handles and one cover. The size of a fish steamer shall be stated in length, width and height in inches (centimeters).

1.2.12 FLAN PAN - A flan pan is a round, shallow utensil with fluted side walls and with a raised or convex solid bottom. The size of a flan pan shall be stated by the top diameter in inches (centimeters). There are also flan rings that are made to be used in conjunction with a cookie sheet.

1.2.13 FLUTED GRATIN DISH (QUICHE DISH) - A fluted gratin dish is a round, shallow dish with fluted sidewalls. It is designed for oven to table service. The size of a gratin dish shall be stated by the top diameter in inches (centimeters).

1.2.14 FONDUE - A fondue consists of a saucepan, covered or uncovered, with a long handle or 2 loop handles, a stand, and a source of heat. It is designed for cooking and serving at the table.

DEFINITIONS

1.2.15 LASAGNA PAN - A lasagna pan is an open, rectangular baking pan with two side handles. It is especially designed for preparing and serving lasagna. The size of a lasagna pan shall be stated by length, width and depth in inches (centimeters).

1.2.16 ONION SOUP SET - An onion soup set is a set of individual covered casseroles, each having two integral side handles. They are especially designed for preparing and serving French onion soup. The size of the individual onion soup casseroles shall be stated in liquid measurement.

1.2.17 PAELLA PAN - A paella pan is a large, round, shallow pan with two side handles. It is especially designed to prepare and serve a Spanish Paella meal. The size of a paella pan shall be stated by the top diameter in inches (centimeters).

1.2.18 PROFESSIONAL-TYPE SAUTÉ PAN - A professional-type sauté pan is a heavy, straight-sided fry pan with a long handle and a flat or curved cover. The size of the professional-type sauté pan shall be stated by the top diameter in inches (centimeters).

1.2.19 PROFESSIONAL-TYPE STOCK POT - A professional-type stock pot is a large, heavy, straight-sided cooking utensil with two side handles and a flat cover. The capacity of the professional-type stock pot shall be stated in liquid measurement.

1.2.20 SOUFFLÉ DISH - A soufflé dish is a deep, straight-sided baking dish with smooth interior sidewalls and delicately fluted exterior sidewalls. It is especially designed for baking soufflés. The capacity of a soufflé dish shall be stated in liquid measurement. It is available in large or individual sizes.

1.2.21 SPRINGFORM PAN - A springform pan is a round, deep pan used primarily to make cheesecakes. The side section is equipped with a clamp or lock so it can be completely released and removed without disturbing the contents of the pan. It may have a flat or tubed bottom or both for interchangeable use. The size is expressed for top inside diameter and perpendicular depth with volume at level full capacity.

1.2.22 TANGINE PAN - A two part pan with a circular, low-sided bottom and a dome shaped cover used to produce traditional North African recipes. Product may be made of ceramic or metal.

1.2.23 TART/QUICHE PAN - A tart/quiche pan is a round, shallow utensil with fluted side walls and removable bottom. The size of a tart/quiche pan shall be stated by the top diameter in inches (centimeters).

1.3 BAKEWARE (NON-ELECTRIC)

The term Bakeware refers to those products used for foods which cook by absorbing heat from the surrounding hot air as produced in an oven (also known as indirect heat).

1.3.1 CAKE PANS - Utensil available in round, square, or oblong shapes with slightly tapered sides used for baking cakes. Cake pan dimensions generally are as follows:

DEFINITIONS

TABLE 1.2.1

INCHES	CENTIMETERS
Oblong	
10 x 6 x 1 ½	25 x 15 x 4
11 x 7 x 1 ½	28 x 18 x 4
12 x 7 ½ x 2	30 x 19 x 5
13 x 9 x 2	33 x 23 x 5
Round	
8 x 1 ½	20 x 4
9 x 1 ½	23 x 4
10 x 1 ½	25 x 4
Square	
8 x 8 x 2	20 x 20 x 5
9 x 9 x 2	23 x 23 x 5
10 x 10 x 2	25 x 25 x 5
Tube	
9 x 3 ¼	23 x 9
10 x 4	25 x 10

1.3.2 **ANGEL OR TUBE CAKE PAN** - Usually a circular pan with slightly tapered high sides, with tubular insert for angel food cakes, chiffon cakes, etc.

1.3.3 **CAKE MOLD** - (Bundt®, Bund, Fluted Tube, Turk's Head, Guglehupf Pans) - A cake mold is a utensil with a central tube and a "carved" design in the side wall. It is designed for cakes, gelatin salads and desserts. The capacity of the cake mold shall be stated in liquid measurement by cups (milliliters).

1.3.3 **PIE PAN OR PIE PLATE -** A pie pan or pie plate is a round, open utensil with flared sides, especially designed for baking pies. The most commonly used sizes for pie pans or pie plates are as follows:

TABLE 1.2.4

INCHES	CENTIMETERS
4 ¼ x 1 ¼	11 x 3
5 x 1	12 x 3
6 x 1	15 x 3
8 x 1 ¼	20 x 3
9 x 1 ¼	23 x 3
10 x 1 ½	25 x 4
11 x 1 ½	28 x 4
12 x 1 ½	30 x 4

1.3.5 **CASSEROLE** - A casserole is a covered or uncovered utensil in which food may be baked and served. It may have one or two handles. The size of a casserole shall be stated in liquid capacity. Some models may not have a cover.

1.3.6 **CHEESECAKE PAN** - A cheesecake pan is a round, deep pan with a removable bottom. It is especially designed for making cheesecake and desserts.

DEFINITIONS

1.3.7 COOKIE SHEET - A cookie sheet is a flat rectangular utensil which may be open on one, two or three sides. It is especially designed for baking cookies and biscuits. Some common sizes for cookie sheets generally are as follows:

TABLE 1.2.7

INCHES	CENTIMETERS
10 x 8	25 x 20
14 x 9	36 x 23
14 x 10	36 x 25
15 ½ x 12	39 x 30
16 x 11	41 x 28
16 x 14	41x 36
17 x 14	43 x 36
18 x 12	46 x 30
18 x 14	46 x 36

1.3.8 CUSTARD CUP - A custard cup is a small, deep, individual, bowl-shaped utensil especially designed for oven use. The size of a custard cup shall be stated in liquid measurements.

1.3.9 JELLY ROLL PAN OR BAKING SHEET - A jelly roll pan or baking sheet is a shallow rectangular utensil, usually 1" (2.5 cm) deep. The most common sizes are 15 ½ x 10 ½ x 1" (39 x 27 x 2.5 cm), 17 x 11 x 1" (43 x 28 x 2.5 cm) and 13 x 9 x ¾" (33 x 23 x 2 cm).

1.3.10 BREAD OR LOAF PAN - A loaf pan is a deep, narrow rectangular utensil with slightly flared sides, designed for oven use. A 1 pound loaf size is usually 8 ½ x 4 ½ x 2 ½". The sizes most generally available are as follows:

TABLE 1.2.10

INCHES	CENTIMETERS
7 ½ x 3 ¾ x 2 ¼	19 x 10 x 6
8 ½ x 4 ½ x 2 ½	22 x 11 x 6
9 x 5 x 3	23 x 13 x 8
9 ½ x 5 x 3	24 x 13 x 8
11 x 7 x 3	28 x 18 x 8

1.3.11 MUFFIN OR CUPCAKE PAN - A muffin or cupcake pan is a tray-like utensil containing a number of individual cups which are formed from the tray metal (seamless) or are lock-seamed to the tray. The cups usually measure:

TABLE 1.2.11

INCHES	CENTIMETERS
1 ¾ x 1	4 x 3
2 ½ x 1 ¼	6 x 3
3 x 1 ½	8 x 4

1.3.12 BROILING PAN - A large flat pan with perforated top that allows fat to drip to pan below. Used for broiling steaks, chops, etc.

DEFINITIONS

1.3.13 OPEN ROASTING AND BAKING PAN - An open roasting and baking pan is a large rectangular pan especially designed for roasting meats and poultry, and for baking. The sizes generally are as follows:

TABLE 1.2.13

INCHES	CENTIMETERS
13 ½ x 9 x 2	34 x 23 x 5
14 x 10 x 2	36 x 25 x 5
15 ½ x 10 ½ x 2 ¼	39 x 27 x 6
17 ¼ x 11 ½ x 2 ¼	44 x 29 x 6

1.3.14 COVERED ROASTING PAN - A large, covered oblong, oval or round pan usually available in size 10 to 19" (25 to 48 cm). Generally used for roasting meats and poultry.

1.3.15 STEAK PLATTER - Usually an oval shallow pan. Used for broiling steaks, chops, etc., and as a serving piece.

1.3.16 PIZZA PAN - A round shallow or flat pan for making pizza. General sizes are 12, 14 and 16" (30, 36 and 41 cm). May be solid or perforated.

1.4 MISCELLANEOUS KITCHENWARE AND PANTRYWARE (NON-ELECTRIC)

Included in this classification are various and sundry kitchenware and pantryware items, manufactured from Aluminum, Steel and other metals, such as:

- Colanders and Strainers
- Bun Warmers
- Canisters
- Cutters-Cookie & Biscuit
- Ice Buckets
- Dessert & Salad Molds
- Cookie Guns or Presses
- Broiler & Baking Racks
- Water Pitchers
- Grease Containers
- Salad Bowls
- Mixing Bowls
- Range Sets
- Ice Cube Trays
- Cookie & Cake Decorators
- Lazy Susan's
- Candy & Nut Dishes
- Serving Trays
- Serving Bowls
- Measuring Cups or Spoons
- Fondue Dishes
- Chafing Dishes
- Salt & Pepper Shakers
- Funnels
- Dippers
- Tea Balls
- Clothes Sprinklers
- Egg Slicers
- Food Mills
- Flour Sifters
- Reflector Pans
- Pudding Pans
- Dish Pans
- Pails

1.5 ELECTRICAL COOKWARE AND FOOD PREPARATION ITEMS

Included in this classification are all types of electrical items manufactured from aluminum, steel or other metals.

2 PROCEDURE FOR DETERMINING SIZES AND CAPACITIES

2.1 TOP-OF-RANGE COOKWARE

2.1.1 CAPACITIES AND DIMENSIONS - The capacity of cookware shall be stated in liquid measurement as level full in quarts (or fractions thereof) or in liters (decimal fractions thereof or milliliters), or both, where "level full" is defined as the capacity of the vessel to the rim when sitting on a flat surface. Exceptions are capacities for fry-pans, skillets, griddles, and omelet, sauce, or crepe pans which shall be stated as top outside dimensions in inches or centimeters, or both, exclusive of handles; and for coffee makers, shall be stated as the number of portions of finished brew or total capacity, or both (5 oz. US and 4 oz. EU). For pans with wide beaded set-downs or flanges at the upper rim of the pan, the dimensions may be stated and marked as "inside dimension" using the abbreviation "i.d.". Cooking capacity shall be defined as the usable capacity of a vessel (less than the level full capacity).

2.1.2 MARKINGS - The manufacturers shall mark measurements of top-of-range cooking utensils either permanently or with temporary labels. While household cooking utensils are not considered consumer commodities by the FTC, the prudent manufacturer should adhere to the regulations when at all possible. All markings should conform to The U.S. Fair Packaging and Labeling Act for U.S. sale or for the country in which the product is intended to be sold. Regulations are contained in 16 CFR (Code of Federal Regulation) Ch. 1 § 500.1 and following. Additionally, many retailers require multi-language labels, typically French and Spanish in addition to English.

2.1.3 TOLERANCES - Manufacturing tolerances are allowable as follows:

Dimensional Tolerances:	± ¼" or 6 mm
Capacity Tolerances:	± 5% of total volume

2.2 BAKEWARE

2.2.1 CAPACITIES AND DIMENSION - The capacity of bakeware shall be stated in liquid measurement as level full in quarts (or fractions thereof) or in liters (decimal fractions thereof or milliliters), or both. The following dimensions of bakeware shall be stated in inches to the nearest ¼ inch or centimeters to the nearest whole centimeter, or both (this rounding shall be applied before consideration of applicable tolerances specified in Section 2.1.3. See notes below on dimensions less than 2" (5.08 cm) and roasting pans. Pan dimensions shall be measured in the following manner:

(1) The top inside dimensions for length and width or diameter.*

(2) The inside vertical dimension perpendicular to the bottom surface for depth

The order of dimensions for round utensils shall be diameter by depth; and for rectangular utensils, length by width by depth.

2.2.2 MARKINGS - The manufacturer shall mark measurements of bakeware either permanently or with temporary labels. Particularly for depth measurements of 2" or less, it is recommended that the **exact** depth of the bakeware be disclosed by

labeling. Upward rounding to the nearest ¼" may result in enforcement actions by weights and measurement officials in some localities. However, U.S. regulations do not require depth to be listed when less than 2" (5.08 cm) for square, oblong, rectangular, circular or generally round shaped product. All markings should conform to The U.S. Fair Packaging and Labeling Act for U.S. sale or for the country in which the product is intended to be sold. Regulations are contained in 16 CFR (Code of Federal Regulations) Ch. 1 § 500.1 and following. Additionally, many retailers require multi-language labels, typically French and Spanish in addition to English.

***Roasting Pans may have their outside measurements listed as an aid to consumers in determining if a roaster will fit into a particular oven cavity, in lieu of other dimensional measurements. This is the traditional manner of measurement provided for these pans.*

2.2.3 TOLERANCES - Manufacturing tolerances are allowable as follows:

Dimensional Tolerances: ± ¼" or 6 mm
Capacity Tolerances: ± 5% of total volume

2.3 LIQUID MEASURES

2.3.1 DEFINITION - Household liquid measures have a capacity of one quart, one pint, or ½ pint (one cup). Their capacities and sub-divisions are defined in terms of quarts or pints, fluid ounces or cups. They are designed for the non-commercial measurement of liquid ingredients used in preparing foods.

2.3.2 CAPACITIES - The capacity levels of liquid measures shall be defined by the use of graduation marks. The measure shall be so designed as to permit it to be filled with liquid to the proper mark while standing upon a level surface. The graduation marks shall be based upon the following relationship: one quart = 32 fluid ounces = 4 cups = 946 milliliters. Minimum graduation markings shall be: 1 cup measure = 1, ¾, ⅔, ½, ⅓, and ¼ cup. 2 cup measure = same intervals as 1 cup measure, except ranging from 2 through ¼ cup.

2.3.3 MARKINGS - Markings on all liquid measures shall be conspicuous and durable. The value of all graduation marks shall be shown, but the word "cup" need appear only once. In addition to cup graduations, liquid measures may also be marked to show the equivalents of their capacities in terms of liquid pints, fluid ounces and milliliters. All graduation marks shall be clear and distinct.

2.3.4 TOLERANCES - The tolerances to be allowed in excess of deficiency on measuring cups shall be the values shown in Table 2.3.4 for sub-divided and for single capacity cups, respectively.

TABLE 2.3.4 - TOLERANCES FOR LIQUID MEASURE

Capacity of Measures or Subdivisions			Tolerances for Measures (+/-)		
Cup	Fluid Ounces	ml	Fluid Drams	ml	Percent
1	8	236.6	3.2	11.8	5
2	16	473.2	6.4	23.6	5
4	32	946.4	12.8	47.2	5

DETERMINING SIZES AND CAPACITIES

2.4 HOUSEHOLD DRY MEASURES

2.4.1 DEFINITION - Household dry measures have a 1 cup capacity (equal to eight fluid ounces, over- flow full) or have sets of four measures including 1 cup and the following fractions of 1 cup: ½, ⅓ and ¼ level full. Their total capacities are defined in terms of cups and tablespoons. They are designed for the non-commercial measurement of dry ingredients used in preparing foods.

2.4.2 CAPACITIES - Dry measures shall be of the following capacities only: 1, ½, ⅓ and ¼ cup. The capacity of dry measures shall be determined by the amount of material contained when leveled with a straight edge of a knife or spatula, and shall be given in cups and tablespoons based on the relation, 1 cup equal 16 level tablespoons. The capacities shall be as follows:

1 cup = 16 level tablespoons
½ cup = 8 level tablespoons
⅓ cup = 5 level tablespoons + one level teaspoon
¼ cup = 4 level tablespoons.

Dry measures of 1 cup may be sub-divided by graduation marks.

2.4.3 MARKINGS - All dry measures shall be conspicuously and durably marked in terms of cups and tablespoons to show their capacities, and no other equivalents shall be shown. The word "cup" need appear only once. All graduation marks shall be clear and distinct.

2.4.4 TOLERANCES - The tolerances to be allowed in excess or deficiency on measuring cups shall be the values shown in Table 2.4.4 for subdivided and for single-capacity cups, respectively.

TABLE 2.4.4 - TOLERANCES FOR DRY MEASURE

Capacity of Measures or Subdivisions with Fluid Equivalents			Tolerances for Measures (+/-)		
Cup	Fluid Ounces	ml	Fluid Drams	ml	Percent
1	8	236.6	3.2	11.8	5
½	4	118.3	1.6	5.9	5
⅓	2 ⅔	78.9	1.1	3.9	5
¼	2	59.2	0.8	3.0	5

2.5 HOUSEHOLD MEASURING SPOONS

2.5.1 DEFINITION - A set of measuring spoons shall consist of four individual spoons of the following measures: 1 tablespoon, 1 teaspoon, ½ teaspoon, ¼ teaspoon. They are designed for non-commercial measurement of ingredients used in preparing foods.

2.5.2 CAPACITY - The capacity of the spoons shall be determined by the amount of liquid or dry material contained when leveled with a straight edge of a knife or spatula.

DETERMINING SIZES AND CAPACITIES

2.5.3 MARKINGS - All measuring spoons shall be conspicuously and durably marked in terms of teaspoons or tablespoons. They should be made to represent individual capacities with no subdivision marks.

2.5.4 TOLERANCES - Tolerances for measuring spoons shall be in accordance with Table 2.5.4.

TABLE 2.5.4 – TOLERANCES FOR MEASURING SPOONS

Spoons	Capacity of Spoons Milliliters	Tolerances (±) for Spoons	
		Milliliters	Percent
1 Tablespoon	14.79	0.73	5
1 teaspoon	4.93	0.24	5
½ teaspoon	2.46	0.12	5
½ teaspoon	1.23	0.06	5

2.6 SALAD AND DESSERT MOLDS

2.6.1 DEFINITION - A salad or dessert mold is a utensil for holding mixtures which are to be refrigerated or baked. It may be of any decorative shape or size.

2.6.2 CAPACITY - The capacity shall be stated in liquid measure by cups, pints, or quarts to a level ¼" from the top of mold.

2.6.3 MARKINGS - The capacity should be indicated on the mold in a durable manner, either permanently or with a label.

2.6.4 TOLERANCES - Manufacturers' tolerances are allowable as follows:

Dimensional Tolerances: ± ¼" or 6 mm
Liquid Measure Tolerances: ± 5% of total volume

3 SPECIFICATIONS ON HANDLES and FITTINGS

3.1 SCOPE

The following represents the aims and objectives of the Cookware Manufacturers Association in establishing standards covering strength and reliability of handles and fittings used and/or attached to cookware and ovenware items as defined in Section 1 of Chapter 1 of this Manual.

3.2 HANDLE ASSEMBLY COMPONENTS

Individual component design, strength, and material selection will be left to the discretion of the manufacturer; however, all components in the assembly must meet the minimum "Assembly Strength" requirement, as defined in Section 4.3. Additionally, when the combined weights of the pan and a volume of water filling the pan is more than 11 pounds (5 kg), then a secondary side handle should be a part of the pan if the pan has a long “stick” handle.

3.3 HANDLE ASSEMBLY AND TESTS

The following standard procedures to be used to determine strength and reliability:

3.3.1 STICK HANDLES—SINGLE HANDLE PANS

3.3.1.1 Assembly strength - The assembly must support a weight, (placed in the center of the pan), equal to 8.8 lbs (4 kg) or twice the weight of the water capacity of the pan, plus the weight of any lid, whichever is greater. Fracturing or deformation of 10 degrees or greater of any part shall constitute failure. For shallow sided or non-sided griddles, the pans shall be loaded with a weight equal to that used with an equivalent diameter fry pan, but in no case less than 8.8 lbs.

3.3.1.2 Test Procedure for COLD (room temperature) assembly strength

1. Support handle in manner similar to hand held handle.
2. Apply load to center of pan.
3. Load the described weight required by Section 3.3.1.1.
4. Fracturing or deformation of 10 degrees or greater of any part during a 1 minute period shall constitute failure.

3.3.1.3 Test Procedure for HOT assembly strength.

1. Preheat controlled oven to 350º ±10ºF, or its manufacturer’s recommended use temperature.
2. Heat pan with handle assembled and loaded in the center equal to that specified in Section 3.3.1.1 until the entire handle reaches 350º F, or its manufacturer’s recommended use temperature for 40 minutes.
3. Lift pan from oven by grasping handle in normal manner.
4. Fracturing or deformation of 10 degrees or greater of any part during a 1 minute period shall constitute failure.

HANDLES AND FITTINGS

3.3.2 SIDE HANDLE ASSEMBLIES & STICK HANDLES WITH HELPER HANDLES

3.3.2.1 Assemblies strength - The assemblies must support a weight equal to 8.8 lbs (4 kg) or twice the weight of the water capacity of the pan plus the weight of any cover intended for use with the pan. Fracturing of any part shall constitute failure.

3.3.2.2 Test Procedure for COLD (room temperature) assembly strength -

1. With the pan suspended by the ends of the handles, apply a load equal to 2 times the water capacity plus the cover at the center of the pan.

2. Fracturing or deformation of 10 degrees or greater of any part in 1 minute shall constitute failure.

3.3.2.3 Test Procedure for HOT assembly strength -

1. Preheat controlled oven to 350º ±10ºF, or the manufacturer's recommended use temperature.

2. Heat pan with handles assembled and loaded with the described weight until the two handles reach 350ºF, or at its manufacturer's recommended use temperature for 40 minutes.

3. Lift pan from oven by grasping handles in a normal manner.

4. Fracturing or deformation of 10 degrees or greater of any part in 1 minute shall constitute failure.

3.3.3 TORQUE RESISTANCE FOR STICK HANDLE PANS - 40 inch pounds of torque, when applied at right angles to the centerline axis of a stick handle, should not cause a deflection of greater than 10 degrees or damage to the handle, its ferrule or fixing system. The torque is applied to the handle of the pan while holding the cookware body rigid. This test shall be applied in both a clockwise and counterclockwise rotation.

3.3.4 HANDLE POSITION ON COOKWARE WITH STICK HANDLES - When the cookware is filled to capacity with water, the handle shall be positioned **above** the center of gravity. For shallow items, there should be a minimum clearance of 1 $^{3}/_{16}$" (30mm) between the handle and the horizontal projection of the base of the item of cookware at a point halfway along the handle assembly. In the case of side handles, the measurement is taken at the lowest point, where they are normally grasped. Items intentionally designed to be reversible such as waffle irons and flat griddles are exempt from this section.

HANDLES AND FITTINGS

Illustration 4.3.4 – MINIMUM CLEARANCE OF HANDLE

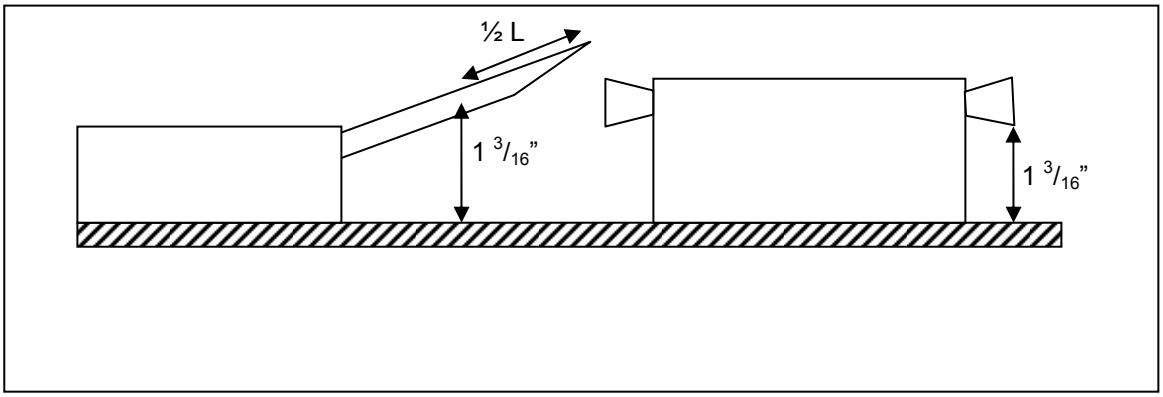

3.3.5 FATIGUE RESISTANCE OF WELDMENTS AND HANDLE FIXTURING – A handle should withstand 15,000 cycles of raising from and lowering to a level surface without distortion or loosening of the handle or its fixing system when loaded with a weight 1.5 times that of the pan's water capacity. Raising and lowering of the pan will constitute a cycle. The prescribed cycling frequency shall be 25 cycles per minute. Distortion of less than 5% of the handle length measured at the end of the handle is ignored unless it affects safety or function. See Illustration 3.3.5 for a machine design and specific procedures for this test.

For cooking vessels of 12 quarts and larger with welded, riveted or fixture side handles, in recognition of the pans intended use, the cycle test shall be 1,000 cycles (each cycle being a raising and lowering) with a weight equivalent of the weight of water to be contained by the pan loading the vessel. Distortion of the handle or side of the pan which results in cracking or deformation of the finish is allowable.

HANDLES AND FITTINGS

ILLUSTRATION 3.3.5 - HANDLE FATIGUE TEST SETUP & PROCEDURE

Handle fatigue test

E.1 Apparatus

E.1.1 A means of continuously raising and lowering a loaded item of cookware, from a level surface covered by a rubber plate (thickness 5 mm; hardness 50 ± 10 Shore), 25 times per minute by means of its handle.

NOTE The general form of a suitable apparatus is shown in figure E.1.

E.1.2 Materials allowing the cookware to be steadily loaded during the test, for example aluminium oxide, mesh size 46.

Dimensions in millimetres

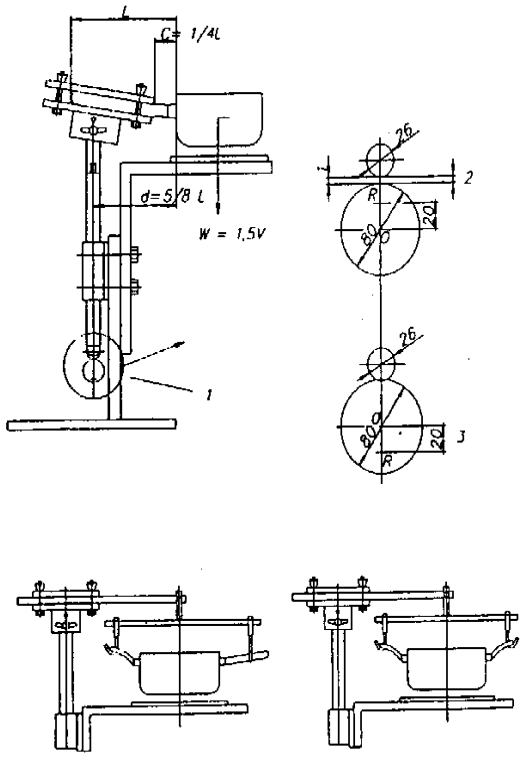

Key

1 – Circular cam
2 – Circular cam in low position
3 – Circular cam in high position
O = Cam centre
R = Rotation centre

E.2 Procedure

E.2.1 Attach the cookware securely to the apparatus, as shown in figure E.1, appropriate to the type and number of handles. Ensure that it sits flat on the table and that there is a gap of 1 mm between the cam and the follower when the cam is at its lowest point.

E.2.2 Place into the cookware a loading (*W*) equivalent to 1,5 times the mass of water (*V*) at the capacity of the cookware.

E.2.3 Run the apparatus for the required number of cycles. After which remove the cookware from the apparatus and examine and record any permanent damage to the handle or fixing system.

HANDLES AND FITTINGS

3.3.6 STICK HANDLES - The single stick handle assembly must support a weight of 8.8 lbs placed in the center of the pan or if it features a helper handle, a weight equal to two (2) times the weight of water capacity of the pan, considered to be 100% safety factor, and withstand a maximum of 350ºF (177ºC), or recommended use temperature, without a functional failure. For griddles and other shallow or no-sided pans, the weight shall be equivalent to that used in a skillet of equal diameter as the griddle.

3.3.7 SIDE HANDLES - The side handle assembly must support a weight placed in center of pan and suspended by both side handles equal to two (2) times the weight of water capacity of the pan (considered to be 100% safety factor) and withstand a maximum of 350ºF (177ºC) or the recommended use temperature without a functional failure.

3.3.8 KNOB ASSEMBLIES - Knob assemblies shall withstand a maximum of 350ºF (177ºC), or recommended use temperature without a functional failure while supporting the cover and a weight equal to the cover.

4 A DESIGN GUIDE FOR PLASTIC HANDLES FOR COOKWARE

At the request of the members of the Cookware Manufacturers Association and in the interest of assisting the development of improved product safety, The Society of The Plastics Industry, through its Molders' Management Division, is pleased to provide the following comments and suggestions. For additional information, access The Society of The Plastics Industry website: www.plasticsindustry.org.

4.1 HANDLE DESIGN

It must be appreciated that the design of plastic cookware handles is dependent on blending functional performance requirements with the need for styling. In considering function performance, the committee recognized it is not qualified to recommend minimum thicknesses or lengths because these factors are dependent on the specific use, i.e., a handle for a small saucepan need not require the same strength as one for a large saucepan.

Handle strength can be affected by more factors than just the part design including materials, mold design, molding process, and molding process control. The interaction of all of these factors, along with the following points, should be considered by manufacturers designing handles and handle molds to insure consistently good quality handles with adequate strengths:

4.1.1 All handles that are attached to cookware and intended to be used for lifting should be designed such that any restrictions in the mold do not obstruct the desirable flow of material during molding and result in variations in handle strength. In this respect the design of handles with holes, steps, or curves, for finger location should be carefully examined. The location of gates and vents, the amount of draft, and the radius in handles should also be considered for proper flow of material in the mold.

4.1.2 A handle should be of sufficient cross section to meet the strength requirements of the assembled utensil and to assure adequate strength at elevated temperatures when in use.

4.1.3 A thorough evaluation of available test data as well as adequate testing of the material to be used for molding the handle should be accomplished for selection of the best material for the planned design.

4.1.4 In all testing there are basic strength differences in formulations due to color and filler change. We therefore caution against direct substitution of different formulation without adequate testing for the intended application.

DESIGN GUIDE FOR PLASTIC HANDLES

4.2 RECOMMENDED TEST PROCEDURE FOR PLASTIC COOKWARE HANDLE MATERIALS

SPI has been requested by the Cookware Manufacturers Association to recommend procedures for testing plastic cookware handles that would be useful to the cookware industry in selecting materials being considered for plastic cookware handles. It would be desirable to have material suppliers do preliminary testing on the materials being considered for plastic cookware handles, since the standard data sheet type information provided by most of the material suppliers may not be adequate for this purpose. The proposed test would be for preliminary screening only and the final test would have to be run by the cookware manufacturer to assure product acceptability.

4.3 STRENGTH TESTING

4.3.1 **Test Specimen** - Use standard ASTM test bar ¼ x ½ x 5". Bars are to be transfer molded or otherwise identified.

4.3.2 **Procedure** - Tests should be performed per ASTM-D790 flexural test method with results expressed in terms of flexural strength PSI.

4.3.3 **Sample Size** - Five (5) test bars are to be tested cold as molded; five (5) test bars are to be tested hot after exposure to a temperature of 350ºF, and five (5) test bars are to be tested hot after exposure to 425ºF.

4.3.4 **Cold Tests** are to be performed at room temperature, while hot tests are to be performed while in the heated environment.

4.3.5 **Hot Tests** are to be performed at 5 minute intervals for the first ½ hour, followed by tests after one, two, four, eight, 16, 200, 400, 600, 800 and 1000 hours have elapsed.

4.4 FLAME/SOFTNESS TESTING - THERMOPLASTIC MATERIALS

4.4.1 **Test Specimen** - We recommend for flame resistance the standard procedure ASTM-D635. These methods are covered in the ASTM Standards, Part 27. The test specimen is a ¼ x ½ x 5" bar; the flame is produced from a ⅜" diameter Bunsen burner and adjusted to a 1" blue flame. Exposure to the flame is two periods of 30 seconds each.

4.4.2 **Procedure** - Immediately upon removing the flame after the second exposure period, the hottest portion of the test bar should be probed with a ¼" glass rod with a rounded end. The purpose of this step is to determine if the plastic becomes sticky or softens to the point that it could cause severe burning if touched inadvertently. Softening of this degree would also cause severe loss of handle strength under similar exposure conditions.

5 METRIC (SI) HOUSEHOLD MEASURES

5.1 BACKGROUND

All countries in World Trade are converting to the International System of Units, SI (Systeme International d'Unite's). The Cookware Manufacturers Association supports, promotes and has adopted this system of measurement. Federal regulations under the Fair Packaging and Labeling Act also require dual U.S. and SI units.

5.2 UNITS USED WITH COOKWARE AND BAKEWARE

The sizes of cookware and bakeware products are expressed using the "Systeme International d'Unite's" (SI). A product's size is defined in linear (length), in capacity (volume), or in mass units.

The metric (SI) units detailed below have been selected for general use in the field of cookware and bakeware:

5.2.1 LINEAR (Length) - Linear dimensions of cookware and bakeware products are expressed in centimeters (cm).

5.2.2 CAPACITY (Volume) - If the capacity of a cookware or bakeware products is smaller than one 1 liter (1000 ml), it is expressed in milliliters (ml). If it is 1 liter (1000 ml) or larger, it is expressed in liters (L).

5.2.3 MASS - If the mass of a cookware or bakeware product is smaller than 1000 grams (g), it is expressed in grams. If it is 1000 grams or more, it is expressed in kilograms (kg).

5.2.4 PRESSURE - Pressure = force per unit area = Newton per square meter (N/m^2) = Pascal (Pa). One Pascal is the pressure applied by one Newton against one square meter. Kilopascal (kPa) is likely to be the commonly used form.

TABLE 5.2.4 - PRESSURE EQUIVALENTS (METRIC AND CUSTOMARY)

psi ($lb./in.^2$)	kPa
5	35
10	70
15	105
20	140
25	170
30	205

5.3 RULES FOR ROUNDING OF SIZES FOR PRODUCT DESCRIPTIONS

5.3.1 LINEAR DIMENSIONS - Lengths used to describe the nominal sizes of products should be expressed to the nearest centimeter (cm). Therefore, linear dimensions will be described as an integral number of centimeters (no decimals).

5.3.2 CAPACITIES - Capacities used to describe the nominal sizes of products should be expressed in the least number of significant digits consistent with the rule that nominal sizes and actual size should not differ by more than 5% of the nominal size.

TABLE 5.3.2 - EXAMPLES OF ROUNDING FOR SI UNITS

Actual Capacity	Incorrect Nominal Description	Correct Nominal Description
991 ml	990 ml	1 L
452 ml	475 ml	450 ml
253 ml	255 ml	250 ml
278 ml	300 ml	280 ml

5.4 SCOPE OF DEFINITIONS

The generic names of products defined, are to be used to achieve consistency of application by manufacturers, recipe writers, retailers and consumers.

5.5 STANDARD CONVERSION TABLE

TABLE 5.5.1 – CONVERSIONS FROM U.S. TO SI MEASURES SHOWING ROUNDING

U.S. Customary Measure	Metric Equivalent		Metric Measure	U.S. Customary Measure	
Inches	Calculated Centimeters	Rounded Centimeters	Centimeters	Calculated Inches	Rounded Inches
1	2.540	2.50	1	.3937	.4
1 ¼	3.175	3.20	2	.7874	.8
1 ½	3.810	3.80	3	1.1811	1.2
1 ¾	4.445	4.40	4	1.5748	1.6
2	5.080	5.00	5	1.9685	2.0
3	7.620	7.50	6	2.3622	2.4
4	10.160	10.00	7	2.7559	2.8
5	12.700	12.50	8	3.1496	3.2
6	15.240	15.00	9	3.5433	3.6
7	17.780	17.50	10	3.9370	4.0
8	20.320	20.00	11	4.3307	4.4
9	22.860	22.50	12	4.7244	4.8
10	25.400	25.00	13	5.1181	5.2
11	27.940	28.00	14	5.5118	5.6
12	30.480	30.00	15	5.9055	6.0
13	33.020	33.00	16	6.2992	6.4
14	35.560	35.00	17	6.6929	6.8
15	38.100	38.00	18	7.0866	7.2
16	40.640	40.00	19	7.4803	7.6
17	43.180	43.00	20	7.8740	8.0
18	45.720	45.00	21	8.2677	8.4
19	48.260	48.00	22	8.6614	8.8
20	50.800	50.00	23	9.0551	9.2
			24	9.4488	9.6
			25	9.8425	10.0
			30	11.8110	12.0
			35	13.7795	14.0
			40	15.7480	16.0
			45	17.7165	18.0
			50	19.6850	20.0
Inches x 2.54 = Centimeters			Centimeters x 0.3937 = Inches		

METRIC MEASURES

TABLE 5.5.2 - VOLUME MEASUREMENTS

	PHASE I			PHASE II	
U.S. Customary Measure	Metric Equivalent		Metric Measure	U.S. Customary Measure	
Quarts	Calculated Liters	Rounded Liters	Liters	Calculated Quarts	Rounded Quarts
½	.473	.470	½	.528	.53
5/8	.591	.590			
¾	.710	.710	¾	.793	.79
1	.946	.950	1	1.057	1.05
1 ½	1.419	1.40	1 ½	1.585	1.60
2	1.893	1.90	2	2.113	2.10
2 ½	2.366	2.35	2 ½	2.642	2.65
3	2.839	2.85	3	3.170	3.15
3 ½	3.312	3.30	3 ½	3.698	3.70
4	3.785	3.80	4	4.227	4.20
4 ½	4.259	4.30	4 ½	4.755	4.75
5	4.732	4.75	5	5.283	5.25
5 ½	5.205	5.20	5 ½	5.812	5.80
6	5.678	5.70	6	6.340	6.30
8	7.571	7.60	8	8.454	8.40
10	9.464	9.50	10	10.567	10.50
12	11.356	11.40	12	12.680	12.60
16	15.142	15.20	16	16.907	16.80
20	18.927	19.00	20	21.134	21.00
Quarts x 0.946353 = Liters			Liters x 1.05669 = Quarts		

TABLE 5.5.3 – SMALL MEASURE MEASUREMENTS

		PHASE I			PHASE II	
U.S. Customary Measure		Metric Equivalent Milliliters		Metric Measure	U.S. Customary Measure Fluid Ounces	
Cup	Fluid Ounces	Calculated	Rounded	ml	Calculated	Rounded
¼	2	59.1470	59	50	1.69	1.7
⅓	2 ⅔	78.8725	79	100	3.38	3.4
½	4	118.2940	118	150	5.07	5.1
⅔	5 ⅓	157.7154	158	200	6.76	6.8
¾	6	177.4410	177	250	8.45	8.5
1	8	236.5880	236	500	16.90	17.0
2	16	473.1760	472	750	25.35	25.5
3	24	709.7640	708	1000	33.38	34.0
4	32	946.3520	944			
teaspoon / Tablespoon	Fluid Ounces	Calculated	Rounded	ml		
¼ t	1/24	1,2322	1.2	1.2		
½ t	1/12	2.4645	2.4	2.5		
1t	1/6	4.9289	4.8	5.0		
1T	½	14.78675	15.0	15.0		
Ounces x 29.5735 = Milliliters				Milliliters x 0.0338 = Ounces		

6 MECHANICAL and SAFETY GUIDELINES FOR COOKWARE AND BAKEWARE

SCOPE: The following represents the aims and objectives of the Cookware Manufacturers Association in establishing basic mechanical and safety guidelines for metal cookware and bakeware items, as follows:

6.1 SHARP EDGES

The metal or plastic parts used in the manufacture of cookware, bakeware and other utensils used in the preparation, serving (excluding functional cutting edge items) and storage of foods that come into contact with the user's body during normal use shall be free of hazardous burrs or sharp edges that will readily cut. It is recommended manufacturers make use of CATRA sharp edge tester or equivalent.

6.2 HANDLES, KNOBS, FITTINGS, ETC.

See additional specific tests for handles in Chapter 3.

6.2.1 THREAD ENGAGEMENT - Three (3) full turns of screw into and/or through the mating part is recommended when assembling, stick and side handles to pans, and knobs to covers, with threaded screws or studs. This procedure insures that the product handle or knob would be obviously loose to consumer prior to reaching an unsafe condition.

6.2.2 PAN STABILITY - The ratio of handle assembly weight to empty vessel shall be such so that cookware shall remain in an upright position on a level surface when empty. See design standard on angle of handle design and clearance in Section 3.3.4.

6.3 GLASS BREAKAGE

Glass covers or glass parts shall not have cracks, chips or faults that could cause the part to break or fracture when heated. Glass items used with metal cookware or bakeware should comply with ASTM C149, and all existing glass industry standards for thermal shock test of glass items. Consult with the glass cover supplier for applicable testing and certification.

Covers utilizing metal bezels, shrouds or decorative rings should be designed and assembled so that the glass is not scratched or chipped. Direct metal-to-glass contact (i.e. metal knobs and/or handles) should be avoided, if possible, by the use of gasketing material to protect the glass.

6.4 FLATNESS OF PAN BOTTOMS

Pan bottoms should be flat for efficient use and for maximum energy transfer. Pans intended for use with induction ranges will perform poorly if any part of the pan bottom is not in physical contact with the induction surface. It is recommended that for all metal pans other than cast iron, or those without intentional bottom designs, that no convex (outward) bow in the bottom of a pan be allowed and a maximum concave (upward) bow of .031” (.8 mm) for pans of 10“ (254 mm) or less in diameter and 0.046” (1.2 mm) for pans greater than 10” in diameter be allowed. For cast iron, flatness on all contact

surfaces should be ± .0625” (1.6 mm). If the pan is designed to become flat when heated, then preheat to designed temperature and then measure for flatness. Designs intentionally and specifically utilizing stepped, formed or machined groove bottoms are exempted from this portion of the standard.

6.5.1 CARE AND USE INSTRUCTIONS

Manufacturers may choose to include use, care, cleaning and maintenance instructions with cookware and bakeware, as appropriate. Such instructions may include:

1. Preparation recommendations before initial use, particularly with nonstick coatings.
2. If a plastic handle is provided, the maximum oven temperature in which the handle may be used.
3. Specific advice on cleaning and caring for the exterior and interior surfaces.
4. Warranty information, if provided, and warranty contact information if handled by a third-party.
5. Name and address of the manufacturer.
6. Advice on how to tighten any handle fixture if the consumer notices it to be loose.
7. Information that helps the consumer maximize satisfaction during use.
8. Information on avoiding use of abrasive pads or cleaners that may scratch or damage glass covers.

7 HEALTH/SAFETY GUIDELINES FOR COOKWARE AND BAKEWARE

SCOPE: The following represents the aims and objectives of the Cookware Manufacturers Association in establishing basic health/safety guidelines for metal cookware and bakeware items, as follows:

7.1 ALUMINUM ALLOYS

The metal specifications for aluminum alloys commonly used in the manufacture of stamped, drawn or cast cookware and bakeware products that come in contact with food are shown in Chapter 11.

7.2 STAINLESS STEEL ALLOYS

The metal specifications for stainless steel cookware and bakeware that come in contact with food are shown in Chapter 12.

7.3 CAST IRON USED FOR COOKWARE AND BAKEWARE

The metal specifications for cast iron cookware and bakeware that come in contact with food are shown in Chapter 15.

7.4 CLAD MATERIALS USED FOR COOKWARE AND BAKEWARE

The metal specifications for clad metals used in cookware and bakeware that come in contact with food are shown in Chapter 13.

7.5 TINPLATE AND ALUMINIZED STEEL USED FOR COOKWARE AND BAKEWARE

The metal specifications for tinplate and aluminized steel used in cookware and bakeware that come in contact with food are shown in Chapter 14.

7.6 SILICONE USED FOR BAKEWARE

See specifications for silicones used in bakeware in chapter 20

7.6 FOOD CONTAMINATION

The construction of and finish on all metal cookware and bakeware should permit easy cleaning of the vessel. There should be no crevices, seams or rough edges to harbor food or bacteria, particularly on food contact surfaces that cannot be readily cleaned.

7.7 APPLIED FINISHES OR DECORATIONS TO METAL COOKWARE AND BAKEWARE

A finish or decoration for cookware can be any material which, when applied, changes the basic appearance and/or function of that cooking utensil from its natural surface.

The finish or decoration may be applied through the use of either organic or inorganic materials. It may be fused on under high heat, spray-applied and bake-dried, plated over the metal, applied by an electrolytic (anodized) method, or in some cases, silk screen or applied decal, as in the case of a decoration.

The type of finish or decoration has certain advantages in each instance, and, generally, its application will be made where factors of use, durability, heat, abrasion, design and appearance or other requirements will make one finish more suitable than another.

Any applied finish or decoration used on a utensil must be acceptable within all applicable federal and state regulations. This applies, but is not limited to, the following types of finishes or decorations:

Types of Finishes
Porcelain Enamel on Aluminum or Stainless Steel
Porcelain Enamel on Steel or Cast Iron
Acrylic Finish
Polyamide Finish
Chrome Plate Finish
Tin Finish
Anodized Finish
Hardcoat Anodized Finish
Nonstick Fluoropolymer Finish
Nonstick High Temperature Resin Finish
Nonstick Silicone Finish
Nonstick Sol-Gel “Ceramic-like” Finish
Nonstick Hybrid “Ceramic-like” Finish (silicone or fluorocarbon modified)
Alkyd Finish
Porcelain enamel on porcelain or pottery
Polyurethane Finish
Epoxy Finish

Types of Decorations
Silk Screen - Porcelain
Silk Screen - Acrylic
Decalcomania
Pad Printed – Porcelain
Silk-screened PTFE decoration

The finishes or decorations, as outlined, are not intended to be all-inclusive, but they do represent those most commonly used on metal cookware products. There are other finishes under various individual company trade names, some of which are variations of finishes or decorations indicated in the above listing.

HEALTH AND SAFETY GUIDELINES

There are a number of rules and regulations that are applicable to the allowable limits of toxic metals, and/or total extractables that may be a part of materials of applied finishes/decorations as used on the food contact surfaces of cookware and bakeware.

7.7.1 APPLIED FINISHES INTENDED TO COME INTO CONTACT WITH FOOD - Applied cookware and bakeware finishes, including nonstick coatings, intended to come into contact with foods, must comply with laws, regulations, directives and/or recommendations of the countries in which they are marketed. Finishes in the U.S. are covered by Food and Drug Administration regulations that have the full force and effect of law. As nonstick coatings are a primary food contact finish, this section provides guidance for manufacturers wishing to use such nonstick finishes for food contact coatings in the U.S. and Europe.

7.7.1.1 U.S. Regulations - In the United States, nonstick coatings fall into two categories:

1. Those intended for use in **commercial applications** such as food-processing facilities, deli departments of grocery stores; and,

2. Those applied to **noncommercial housewares** for use in homes and restaurants to prepare, dispense and serve food.

Nonstick coatings intended for use in **commercial applications** must comply fully with the Federal Food, Drug and Cosmetic Act regulations found in Title 21 of the Code of Federal Regulations[1]. An applied nonstick coating will meet these criteria if:

1. the coating is applied in a continuous film over a metal or other suitable substrate;

2. the coating is formulated with approved substances generally recognized as safe, permitted by prior sanction or approval or specifically listed in 21 CFR;

3. extraction tests are conducted on the coating based upon the types of food and the conditions of use recognized by the FDA;

4. the coating passes extraction tests when tested with food-simulation solvents and under conditions of time and temperature that characterized the intended conditions of use;

5. the extractives are measured by employing the analytical methods required by the FDA;

6. the tests are conducted using equipment and reagents required by the FDA; and,

7. the coating has been thoroughly cleansed prior to its first use. It is each manufacturer's responsibility to communicate this final

[1] FDA regulations governing indirect food additives can be found in 21 CFR Subchapter B; Those for resinous and polymeric coatings in 21 CFR 175.300; those for Perfluorocarbon resins in 21 CFR 177.1550; those for Colorants in Polymers in 21 CFR 178.3297. Additional sections of 21 CFR that may be applicable include, but are not limited to, Polyarylsulfone resins, 177.1560; Polyetherimide resins, 177.1595; Polysulfone resins, 177.1655; Polyethersulfone resins, 177.2440; Polyamide-imide resins, 177.2450; Polyphenylene sufide resins, 177.2490. Title 21 may be purchased at any U.S. Government Printing Office store. It is available online at http://www.accessdata.fda.gov/scripts/cdrh/cfdocs/cfcfr/cfrsearch.cfm

requirement to the end-user via product literature or package instructions.

Nonstick coatings applied to **noncommercial housewares** for use in homes and restaurants to prepare, dispense, or serve foods are exempt from the FDA's food additive regulation under what is commonly referred to as the "housewares exemption". There is one exception: **The FDA will take immediate action to protect the public's health if the nonstick coating is found to adulterate food with unsafe substances.**

Although housewares products are not regulated, it is incumbent on the manufacturer to ensure that each coating is formulated with ingredients known to be safe for use in contact with food and that are appropriate for the intended conditions of use. The prudent manufacturer will have testing performed by a third party laboratory and/or obtain certification from their coatings suppliers, to ensure that the nonstick coatings comply with the same FDA test criteria as coatings used in commercial applications. Nonstick coatings produced under the housewares exemption and tested in accordance with the FDA criteria may be said to comply fully with the Food, Drug & Cosmetic Act and all applicable food additive regulations. Manufacturers should be aware that products may need to comply with other state, federal and international regulations, depending on where the products are to be marketed.

Note: Various action levels estimates for heavy metals and other chemicals listed below were correct at time of standard adoption. The prudent manufacturer will ascertain current action levels prior to marketing products.

7.7.1.2 European Regulations -

The EU is currently in the process of harmonizing legislation on food-contact substances by adopting Regulations and Directives that are designed to replace the existing national legislation of the EU Member States. The EU has adopted a new Framework Regulation (EU Framework Regulation No. 1935/2004/EC), and this legislation governs the use of all food-contact materials. This regulation is presently in force in all EU Member States; it also repeals Directives 80/590/EEC and 89/109/EEC.

Article 3 § 1 of this Regulation establishes the general principles that food-contact materials and articles must be manufactured in accordance with good manufacturing practice so they do not transfer their constituents to food in quantities that could endanger human health, bring about an unacceptable change in the composition of food, or bring about a deterioration in the taste or odor of food.

There is also the new Plastics Regulation: (EU) No. 10/2011 which became effective on May 1st, 2011. The new Plastics Regulation repealed and replaced the Plastics Directive (2002/72/EC) and its amendments. While the new Plastics Regulation does not apply to substances used in coating formulae, it does establish one consolidated positive list of monomers, other starting substances, and additives permitted for use in food-contact materials. This list is known as "the Union List".

Many EU states have laws or "positive lists" of permissible substances. Others rely on recommendations, (e.g. BgVV) or resolutions, (e.g. Council of Europe AP[96-5]). While not legally binding, many cookware manufacturers insist that coatings meet these recommendations and resolutions.

To facilitate trade, EU states have agreed to the principle of "mutual recognition". This allows for the legal importation and sale of housewares products produced in one member state which are legally marketed in another member state even if the products do not comply with the specific regulatory requirements of the country of import.

Manufacturers planning to market their products in Europe should inform their coating suppliers where the housewares products will be offered for sale so that formulations are produced with compliant ingredients. Failure to do so may result in the introduction of illegal products into the European marketplace.

7.7.1.3 State Regulations - Nonstick coatings in both their liquid and finished (post-processing) form may be subject to other federal and state agency regulations that may be unrelated to their safe use with food. For example:

7.7.1.3.a California - California's Safe Drinking Water and Toxic Enforcement Act of 1986 (known as Proposition 65) seeks to prevent certain chemicals causing cancer or reproductive toxicity from being discharged into water and from exposing individuals to these substances with out giving a "clear and reasonable warning" before "knowingly and intentionally" exposing anyone to a listed chemical. While not an officially adopted regulation, California's Attorney General has used the following standard to enforce Proposition 65: California bans lead content greater than 0.1 percent in any foodware surface, as tested using the AOAC method, 15th edition, section 973.32. This method relies on Standard Method ASTM-C-738 for determining leached lead and cadmium, and is reproduced as Exhibit C in this manual. Manufacturers should advise their coating suppliers that their products will be introduced into commerce in California to ensure that coatings formulae will comply with provisions of Proposition 65.

7.7.1.3.b Minnesota Statute 115A.9651 - This statute bans the intentional introduction or incidental presence above 100 parts per million of lead, cadmium, mercury or hexavalent chromium into any pigment, paint, dye, ink or fungicides used or sold in the state after 1998.

7.7.1.3c Massachusetts 105 CMR 460.200 Lead Poisoning and Control - This regulation makes illegal the acts of applying any lead-based paint, glaze or other substance to any toy, furniture, cooking, drinking or eating utensil and the sale, intent to sell, delivery or give away of items to which a lead based paint, glaze or other substance as been applied. "Lead based" means that when tested by ASTM Standard Method C 738, the results are greater than 2 ppm lead.

7.7.1.4 Additional Testing - FDA-mandated extraction studies do not test for heavy metals nor are they intended to do so. Manufacturers may want to have coating formulations independently tested or reviewed for a variety of reasons. Independent laboratories can use various techniques to ascertain trace amounts of or materials contained within coatings. Such independent tests can be used to determine if the coatings contain detectable amounts of heavy metals and/or that the coatings ingredients conform to FDA regulations. The FDA uses equal to or less than 0.5 ppb (parts per billion) dietary concentration as the level at which a substance is not considered a food additive. (See 21 CFR170.39).

Manufacturers relying on third party manufacturing sources, particularly those in developing countries, should be especially vigilant regarding coatings and should conduct independent testing and periodic retesting of applied coatings, including nonstick coatings, to ensure product safety and quality.

For glazed ceramic surfaces on non-metal cookware and for enamelware finishes on metal cookware **only**, the manufacture should ascertain by testing that the release of lead and/or cadmium are within FDA and state acceptable limits. Details of some of these tests are listed below

Some of the more important rules, as well as the test procedures, are as follows:

7.7.1.4a Leachability of Lead and Cadmium for Glazed Ceramic Surfaces – The FDA has established maximum levels for leachable lead in ceramicware, and pieces that exceed these levels are subject to recall or other agency enforcement action. The Division of Compliance Programs of the Food and Drug Administration interprets the regulations for food additives, which covers the leachability of lead and cadmium for glazed ceramic surfaces, by use of the Standard Method of Test, ASTM-C738-94. Limits of lead range from 0.5 ppm for mugs to 3 ppm for plates and flatware. See 21 CFR 109.16 for further guidance regarding cadmium and lead in ceramics. This test is not intended for “ceramic-like” sol-gel nonsticks.

7.7.1.4b Specification for Permissible Limits of Metal Release From Glazed Ceramic Ware - This specification has been adopted by the British Standards Institution and is known as the British Hot Test. This is basically the same type of procedure outlined in Exhibit D except that it is done with hot acetic acid solutions rather than cold solutions.

7.7.1.4c Consumer Product Safety Act Regulations - Lead-Containing Paint - This rule covers allowable limits of lead-containing paint of .06% by weight. The intent of this regulation is to control those products that may have coated surfaces with a lead content that could be injurious to children if same were ingested. While this rule is not fully applicable to metal cookware, the industry, to the best of our knowledge, generally does not apply any finish to the food contact surface of metal cookware or bakeware that would exceed allowable limits. The regulation is contained in 16 CFR-1303. See Exhibit C and Exhibit D.

7.8 POLYETHYLENE BAG MARKING

Polyethylene bags are typically used in packaging of cookware and bakeware in order to prevent cosmetic damage during shipment or while on retail display. Manufacturers should consult with polyethylene bag fabricators to make certain such bags comply with applicable regulations for warning markings in force at the time of the manufacture of the cookware or bakeware.

7.9 ENCAPSULATED AND BRAZED BOTTOM TESTING

Manufacturers are urged to test encapsulated and brazed bottoms by the use of a dry boil test. Place the pan, empty, on an appropriately sized electric burner. For pans greater than 9” in diameter, choose an electric resistance burner that approximates the size of a large standard U.S. range top burner. For pans less than 9” in diameter, choose a standard small U.S. range top burner. The electric burner is set to high and the pan is allowed to remain on the eye for ten minutes or five minutes for pans of a 1 ½ quart capacity or smaller. For pans with copper bottoms the pan is allowed to remain on the eye for ten minutes or five minutes for pans that are 9" in diameter or smaller Upon removal from the burner there should be no separation of the base from the body of the pan and no molten metal escaping from the body/base juncture.

8 STANDARDS FOR ALUMINUM COOKWARE AND BAKEWARE

SCOPE: The following represents the aims and objectives of the Cookware Manufacturers Association in establishing Standards for the use of Aluminum in cookware and bakeware utensils.

8.1 METHOD OF DETERMINING SIZES AND CAPACITIES

General Standards covered in Chapter 2 are equally applicable to aluminum cookware and bakeware.

8.2 DIMENSIONS, TOLERANCES AND TERMINOLOGY

The applicable tolerances for home cookware and bakeware utensils shall be those covered in Chapter 2.

8.3 ALUMINUM COMPOSITIONS

Aluminum utensils in contact with food shall be manufactured from standard alloys, types and compositions as shown in Chapter 12.

8.4 ALUMINUM MILL FINISHES (SHEET AND STRIP)

Mill finishes furnished against this Standard shall be in accordance with established designations by The Aluminum Association.

8.5 RECOMMENDED MINIMUM THICKNESSES FOR ALUMINUM COOKWARE (UNCOATED)

TABLE 8.5.1 - TOP-OF-RANGE COOKWARE (NON-ELECTRIC)

Pan Type	Capacity/Size	Gauge	inch	mm
Saucepans	≤ 3 quart	22	.025	.64
Saucepots	≤ 16 quart	22	.025	.64
	> 16 to 20 quart	20	.032	.81
	> 20 quart	18	.040	1.02
Skillets or Fry Pans	9 to 11"	16	.051	1.30
	> 11“	12	.081	2.06
Chicken Fryers or Covered Fry Pans	9 to 11"	16	.051	1.30
	> 11“	12	.081	2.06
Double Boilers	≤ 3 quart	22	.025	.64
Double Fry Pans	All Sizes	18	.040	1.02
Pressure Cookers	All Sizes	11	.091	2.32
Deep-Fat Fryers	≤ 3 quart	22	.025	.64
	> 3 quart	20	.032	.81
French Omelet Pans	All Sizes	Same as Skillets and Fry Pans		
Griddles - Round, Square or Oblong	All Sizes	12	.081	2.06
Dutch Ovens	≤ 6 quart	20	.032	.81
	> 6 quart	16	.051	1.30
Kettles - Covered	≤ 6 quart	22	.025	.64
	> 6 to I0 quart	20	.032	.81
	> I0 to 16 quart	18	.040	1.02
	> 16 quart	16	.051	1.30
Coffee Makers	≤ 3 cup	26	.016	.41
	> 3 to 5 cup	24	.020	.51
	> 5 cup	22	.025	.64
Teakettles	≤ 2 quart	25	.018	.46
	> 2 quart	22	.025	.64

ALUMINUM STANDARDS

TABLE 8.5.2 - BAKEWARE (NON-ELECTRIC)

Pan Type	Capacity/Size/Shape	Gauge	inch	mm
Cake Pans	Oblong	25	.018	.46
	Round	26	.016	.41
	Square	24	.020	.51
	Tube	26	.016	.41
Pie Pans	≤ 10”	28	.012	.31
	> 10”	24	.020	.51
Casseroles	≥ 2 quart	26	.016	.41
	> 2 to 3 quart	24	.020	.51
Broiling Pans	≤ 10”	24	.020	.51
	> 10”	22	.025	.64
Open Roasting and Baking Pans	All Sizes	22	.025	.64
Covered Roasting Pans (Round)	≤ 11 ½” diameter	22	.025	.64
	> 11 ½” diameter	20	.032	.81
Covered Roasting Pans (Oval)	≤ 18”	22	.025	.64
	> 18”	20	.032	.81
Steak Platters	≤ 11”	22	.025	.64
Cookie Sheets, Jelly Roll Pans or Baking Sheets	10 x 8”	24	.020	.51
	15 ½ x 10 ⅓”	22	.025	.64
	18 in. x 12 in.	20	.032	.81
Bread or Loaf Pans	≥ 9 ½ x 5 ½ x 2 ¾”	25	.020	.51
	> 9 ½ x 5 ½ x 2 ¾” to 16 x 4 x 4”	22	.025	.64
	> 16 x 4 x 4”	20	.032	.81
Muffin or Cup Cake Pans	All Sizes	18	.040	1.02

TABLE 8.5.3 - MISCELLANEOUS KITCHENWARE

Product Type	Capacity/Size/Shape	Gauge	inch	mm
Colanders and Strainers	≤ 1 quart	26	.016	.41
	1 ½. to 3 quart	25	.018	.46
	> 3 to 5 quart	23	.023	.58
	> 5 quart	20	.032	.81
Mixing Bowls	≤ 1 quart	24	.020	.51
	1 ½ to 3 quart	22	.025	.64
	> 3 quart	20	.032	.81

8.6 RECOMMENDED MINIMUM THICKNESSES FOR ALUMINUM COOKWARE (FLUOROPOLYMER COATED)

TABLE 8.6 - MISCELLANEOUS KITCHENWARE

Product Type	Capacity/Size/Shape	Gauge	inch	mm
Bakeware	Bread pans, layer cake pans (round or square), pie pans, cookie or biscuit pans, roasting pans up to 15” in length.	22	.025	.64
	Cookie sheets (open corner items), muffin pans	18	.040	1.02
Fry Pans and Skillets (Non-Electric)	≤ 12” in diameter	14	.064	1.63
	> 12” diameter	12	.081	2.06
Saucepans, Saucepots, Dutch Ovens (Non-Electric)	≤ 6 quart	18	.040	1.00
	> 6 quart	14	.064	1.63
Griddles (round, square or oblong) - Non-Electric	Single burner type	12	.081	2.06
	Double burner type	10	.102	3.18
Electric Fry Pans or Griddles	All Sizes	11	.091	2.32
Electric Saucepans, Saucepots, or Dutch Ovens	All Sizes	12	.081	2.06
Miscellaneous Items such as Poacher Cups with Complex Shapes	All Sizes	22	.025	.64

*8.7 RECOMMENDED MINIMUM THICKNESSES FOR ALUMINUM COOKWARE - (PORCELAIN COATED)**

See Section 16 for Application of Porcelain Coatings

TABLE 8.7

Product Type	Capacity/Size/Shape	Gauge	inch	mm
Bakeware		18	040	1.02
Fry Pans and Skillets	≤ 10”	14	.064	1.63
	> 10”	12	.081	2.06
Saucepans, Saucepots, Dutch Ovens	≤ 6 quart	18	.040	1.02
	> 6 quart	14	.064	1.63
MISCELLANEOUS ITEMS	Percolators & Drip Coffee Makers	18	.040	1.02
	Canisters	18	.040	1.02
	Cake Save Covers	18	.040	1.02
	Grease Containers	18	.040	1.02
	Salt and Pepper Shakers	18	.040	1.02

*8.8 RECOMMENDED MINIMUM THICKNESSES FOR ALUMINUM COOKWARE - (ACRYLIC, POLYIMIDE OR OTHER ORGANIC COATED WARE**

*See Chapter 19 for Application of Organic Coatings.

TABLE 8.8

Product Type	Capacity/Size/Shape	Gauge	inch	mm
Bakeware		22	.025	.64
Fry Pans and Skillets	≤ 8”	16	.051	1.30
	> 8 to 12”	14	.064	1.63
	>12”	12	.081	2.06
Saucepans, Saucepots and Dutch Ovens	≤ 6 quart	22	.025	.64
	> 6quart	20	.032	.81
Coffee Makers	≤ 3 Cup	26	.016	.41
	> 3 to 5 Cup	24	.020	.51
	> 5 Cup	22	.025	.64
Miscellaneous Items	Canisters	22	.025	.64
	Cake Save Covers	24	020	.51
	Grease Containers	22	.025	.64
	Salt and Pepper Shakers	26	.016	.41

9 STANDARDS FOR STAINLESS STEEL COOKWARE AND BAKEWARE

SCOPE

The following represents the aims and objectives of the Cookware Manufacturers Association in establishing Standards for use of Stainless Steel in cookware and bakeware utensils.

9.1 METHOD OF DETERMINING SIZES AND CAPACITIES

General Standards (Chapter 2) equally applicable to Stainless Steel.

9.2 DIMENSIONS, TOLERANCES AND TERMINOLOGY

The applicable tolerances for home cookware and bakeware utensils shall be those covered in Chapter 2.

9.3 STAINLESS STEEL COMPOSITIONS

Stainless Steel utensils in contact with food shall be manufactured from standard AISI Steels of types and compositions as shown in Chapter 12.

9.4 STAINLESS STEEL MILL FINISHES (Sheet and Strip)

Mill finishes furnished against this Standard shall be in accordance with established designations by American Iron and Steel Institute (AISI).

9.5 RECOMMENDED MINIMUM THICKNESSES FOR UTENSILS MADE FROM SOLID STAINLESS STEEL (MILL TOLERANCES NOT INCLUSIVE)

TABLE 9.5.1 – TOP-OF-RANGE COOKWARE

	Minimum Thickness	
PRODUCT TYPE	**Inches**	**mm**
Saucepans	.020	.51
Saucepan Insets	.020	.51
Saucepots	.020	.51
Stock Pots	.022	.56
Dutch Ovens	.022	.56
Fry Pans	See "Clad" or "Laminates"	
Chicken Fryers	See "Clad" or "Laminates"	

TABLE 9.5.2 – BAKEWARE AND ACCESSORIES

	Minimum Thickness	
PRODUCT TYPE	**Inches**	**mm**
Mixing Bowls	.015	.38
Teakettles	.015	.38
Baking and Roasting Pans	.018	.46
Cake Pans	.018	.46
Pie Plates	.018	.46
Cookie Sheets	.018	.46
Pitchers	.025	.64
Bread Pans	.018	.46
Loaf Pans	.018	.46

TABLE 9.5.3 – COFFEE MAKERS

	Minimum Thickness	
PRODUCT TYPE	**Inches**	**mm**
Electric	.022	.56
Non-Electric	.022	.56

9.6 ALLOYS FOR UTENSILS MADE FROM THREE-PLY STAINLESS STEEL LAMINATES

The alloy for the inner and outer face shall be of the same type as recommended in Chapter 12. The core material may be either carbon steel, aluminum, copper and other heat conducting materials.

TABLE 9.6.1 – UNTESILS MADE FROM 3-PLY STAINLESS STEEL LAMINATES

	Minimum Thickness	
PRODUCT TYPE	**Inches**	**mm**
Saucepans	.031	.79
Saucepan Insets	.031	.79
Saucepots	.031	.79
Stock Pots	.035	.89
Dutch Ovens	.035	.89
Fry Pans- Up to 8 inch	.031	.79
Fry Pans - Over 8 inch	.050	1.27
Chicken Fryers	.050	1.27

9.7 ALLOYS FOR UTENSILS MADE FROM BI-METAL STAINLESS STEEL BONDED WITH COPPER

The alloy for the stainless steel portion shall be of the same type as recommended In Chapter 12. The copper portion of the laminate shall be any alloy suitable for the purpose (bonding).

TABLE 9.7.1 – UNTESILS MADE FROM BI-METAL STAINLESS STEEL BONDED WITH COPPER

	Minimum Thickness	
	In. Decimal	mm Metric
Saucepans	.031	.79
Saucepan Insets	.031	.79
Sauté Pans	.031	.79
Saucepots	.037	.94
Stock Pots	.037	.94
Dutch Ovens	.037	.94
Omelet Pans	.037	.94
Au Gratin Pans	.037	.94
Casseroles	.037	.94
Fry Pans - ≤ 8”	.037	.94
Fry Pans - > 8”	.050	1.27

9.8 ALLOYS FOR UTENSILS MADE FROM BI-METAL STAINLESS STEEL BONDED WITH ALUMINUM

The alloy for the stainless steel portion shall be of the same type as recommended in Chapter 12. The aluminum portion of the laminate can be any of the alloys from Chapter 11.

TABLE 9.8.1 – UNTESILS MADE FROM BI-METAL STAINLESS STEEL BONDED WITH ALUMINUM

	Minimum Thickness	
	inches	mm
Saucepans	.065	1.65
Saucepan Insets	.065	1.65
Saucepots	.065	1.65
Stock Pots	.065	1.65
Dutch Ovens	.065	1.65
Fry Pans ≤ 8”	.070	2.03
Fry Pans > 8”	.070	2.41
Chicken Fryers	.070	2.41
Griddles	.070	2.03

9.9 ALLOYS FOR UTENSILS MADE FROM STAINLESS STEEL CLAD ON THE BOTTOM WITH ALUMINUM OR COPPER

The alloy for the stainless steel portion shall be of the same type as recommended in Chapter 12. The aluminum or copper portion can be any alloy suitable for the purpose (bonding).

TABLE 9.9.1 – UNTESILS MADE FROM STAINLESS STEEL AND CLAD WITH ALUMINUM OR COPPER

	Stainless Steel Portion		Copper Clad Portion		Aluminum Clad Portion	
	inches	mm	inches	mm	inches	mm
Saucepans	.020	.51	.011	.28	.045	1.14
Saucepan Insets	.020	.51	.011	.28	.045	1.14
Saucepots	.020	.51	.017	.43	.045	1.14
Stock Pots	.020	.51	.017	.43	.045	1.14
Dutch Ovens	.020	.51	.017	.43	.045	1.14
Fry Pans ≤ 8 inch	.020	.51	.017	.43	.060	1.52
Fry Pans > 8 inch	.025	.64	.025	.64	.070	1.78
Chicken Fryers	.025	.64	.025	.64	.070	1.78

9.1.2 CONSTRUCTION OF IMPACTED OR BRAZED ENCAPSULATED BOTTOM-CLAD UTENSILS - Aluminum or copper discs can be attached to the bottom of stainless steel cookware to improve the heat transfer and heat distribution. The discs can either be exposed on the bottom of the pan or encapsulated with another layer of stainless steel. The bonding of the different metals can be accomplished several ways:

9.1.2.1 Impact Bonding - The different materials are bonded together using heat and pressure. First the parts are heated almost to the softening point of aluminum. The parts are transferred into a press and bonded together.

9.1.2.2 Brazed - The different materials are attached via the brazing process using a third lower melting temperature filler metal.

10 STANDARDS FOR PORCELAIN-ENAMELED STEEL OR IRON COOKWARE AND BAKEWARE

SCOPE: The following represents the aims and objectives of the Cookware Manufacturers Association in establishing applicable standards for porcelain-enameled steel and iron cookware or bakeware.

10.1 DEFINITION OF INDUSTRY PRODUCTS

The general standards as outlined in Chapter 1 are applicable to porcelain-enameled steel and iron cookware.

10.2 METHODS OF DETERMINING SIZES AND CAPACITIES

General standards outlined in Chapter 2 are equally applicable to porcelain-enameled cookware.

10.3 DIMENSIONS, TOLERANCES

The dimensions and tolerances outlined in Chapter 2 are equally applicable.

10.4 HANDLES, KNOBS, ETC.

Handles, where used, should be well formed, of sturdy construction, and securely attached to the body. When applicable, the attachment shall conform to the standards as outlined in Chapter 3.

10.5 BASE METAL COMPOSITIONS

The base metal shall be of good grade iron or steel having the strength, rigidity, and quality necessary for production of multiple-coated or single-coated porcelain-enameled utensils.

10.6 BASE METAL PREPARATIONS

When applicable the base metal shall be prepared for enameling by suitable methods similar to those outlined in Porcelain Enamel Institute Bulletin PEI-301.

10.7 PORCELAIN ENAMEL FINISHES

The porcelain enamel finish standards shall be in accordance with established standards as shown in Chapters 16 and 17.

10.8 DESIGN AND FABRICATION OF PORCELAIN ON STEEL OR IRON COOKWARE AND BAKEWARE

All ware shall be well formed with design and fabrication considerations, when applicable, in accordance with recommended specifications as outlined in Porcelain Enamel Institute Bulletin PEI-101.

11 METAL SPECIFICATIONS FOR ALUMINUM AND USED FOR COOKWARE AND BAKEWARE

11.1 ALUMINUM ALLOYS - FABRICATED COOKWARE AND BAKEWARE.

The aluminum alloys commonly used in the manufacture of stamped or drawn cookware and bakeware products which come in contact with food are as follows:

TABLE 11.1.1

Alloy	Alloy-Characteristics	Use
1100	Excellent workability and corrosion resistance, low work hardening, non-heat-treatable.	Deep and irregular shaped draws and forging's. Good anodizing qualities
3003	General purpose alloy; good workability and corrosion resistance moderate strength and low work hardening; non heat-treatable.	Deep draw and forging and spinning applications. Wide variety of use including cookware, bakeware and small appliances.
3003 (Low Magnesium Content .01% or Less)	Same as 3003 but having good resistance to spalling in porcelain coating application.	Porcelain coated applications, including cookware bakeware and small appliances.
3005	Similar to 3004.	Deep draw and stamping applications.
3004	Increased strength and hardness over 3003 alloy. Excellent buffing quality. Contains magnesium and will not accept porcelain coating without a protective coating.	General cookware, deep draw and stamping applications requiring high luster buffed finish.
AHA or (Age Hardening Alloy)	3003 alloy clad (2 sides) over 7002 or 7004 core which hardens through high temperature treatments.	Porcelain and Teflon coating applications where firing hardens rather than anneals the alloy for a stronger product.
3003 - Clad 7072 (one Side)	All qualities of 3003, but having the high corrosion resistance of 7072 side.	High heat water containers such as tea kettles where high corrosion and mineral deposits exist.
4000	Contains silicon.	General cookware use.
5357, 5457, 5657	Similar to 3003, but slightly less workability.	Anodized auto trim, cooking utensils and trim.
5052	Contains magnesium and will not accept porcelain coating without protective cladding.	Areas where increased strength is necessary.

11.2 ALUMINUM ALLOYS - CAST COOKWARE AND BAKEWARE

The aluminum alloys commonly used in the manufacture of cast cookware products that come in to contact with food are as follows:

TABLE 11.2.1

Alloy	Alloy-Characteristics	Use
319	Sand casting alloy.	General bakeware applications.
356	Sand casting alloy offering increased corrosion resistance.	When increased corrosion resistance is desired.
360	Sand casting alloy offering increased corrosion resistance.	Cookware and bakeware applications.
380	Die casting alloy, good anti-soldering to die characteristics	General purpose alloy for many products
413	Die casting alloy, good corrosion resistance, good die filling capacity	Cast cooking vessels
443.1/443.2	Excellent casting in both die casting and permanent molds – good corrosion resistance and weld-ability	Cast cooking utensils electric skillets, sauce pans and griddles.

In addition to the above, it is important to state the alloying elements that will provide a chemical composition for cast aluminum cooking utensils that will minimize staining and corrosion under conditions of normal use. This had been covered under commercial standards CS134-46, which has been withdrawn by the U.S. Department of Commerce.

As an Association we establish as a voluntary standard the following detail requirements for cast, aluminum cooking utensils:

11.2.1. Cast aluminum cooking utensils shall be made of aluminum alloys as specified herein, of high quality and workmanship in conformity with good manufacturing practice. They shall be free from imperfections and defects which might affect their serviceability.

11.2.2. The permissible alloying elements of cast aluminum cooking utensils shall be limited to silicon, magnesium, zinc, titanium, chromium, and manganese, which may be employed in any amounts suitable to the respective alloy.

METAL SPECIFICATIONS--ALUMINUM

The metal specifications for aluminum alloys commonly used to manufacture stamped, drawn or cast cookware and bakeware are as follows:

NOTE: Percentages given are normally maximums.

TABLE 11.3 – METAL SPECIFICATIONS FOR ALUMINUM ALLOYS

Alloy	Silicon	Iron	Copper	Manganese	Magnesium	Chrome	Zinc	Titanium	Other	Aluminum
1100	0.95 Si + Fe max		0.05 - 0.20	0.05	-	-	0.10	-	.015	(Minimum) 99.00
3003	0.60	0.70	0.50 - 0.20	1.00 - 1.50	-	-	0.10	-	0.15	Remainder
3004	.030	0.70	0.25	1.00 - 1.50	0.80 - 1.30	-	0.25	-	0.15	Remainder
3005	0.60	0.70	0.30	1.00 - 1.50	0.20 - 0.60	0.10	0.25	0.10	0.15	Remainder
3105	0.60	0.70	0.30	0.30 - 0.80	0.20 - 0.80	0.20	0.40	0.10	0.15	Remainder
4000	1.70	0.60	0.25	1.55	0.01	0.01	0.05	-	0.15	Remainder
5052	0.65 Si + Fe max		0.10	0.10	2.20 - 2.80	0.15 - 0.35	0.10	-	0.15	Remainder
5356	0.65 Si + Fe max		0.10	0.05 - 0.20	4.50 - 5.50	0.05 - 0.20	0.10	0.06 - 0.20	0.15	Remainder
5357	0.12	0.71	0.20	0.15 - 0.45	0.80 - 1.20	-	-	-	0.15	Remainder
5457	0.08	0.10	0.20	0.15 - 0.45	0.80 - 1.20	-	0.05	-	.010	Remainder
5657	0.08	0.10	0.10	0.03	0.60 - 1.00	-	0.03	-	.05	Remainder
7072	0.7 Si + Fe max		0.10	0.10	0.10	-	0.80 - 1.30	-	.15	Remainder
319*	5.50 - 6.30	1.00	3.00 – 4.00	0.50	0.10	-	1.00	0.25	0.50	Remainder
356*	6.50 - 7.50	0.60	0.60	0.50	0.50	0.25	0.50	0.25	0.35	Remainder
360*	9.00 -10.00	0.70 - 1.10	0.10	0.10	0.45 - 0.60	-	0.10	0.10	0.10	Remainder
380*	7.50 - 9.50	.80 - 1.20	2.75 - 3.75	0.50	0.30	0.15	1.0 - 3.50	0.25	-	Remainder
413*	11.0-13.0	2.0	1.0	0.1	-	0.5	0.5	-	Sn .15	Remainder
443.1*	4.50 - 6.00	0.60	0.60	0.50	0.50	0.25	0.50	0.25	0.35	Remainder

* Casting Alloy

12. METAL SPECIFICATIONS FOR STAINLESS STEEL AS USED FOR COOKWARE AND BAKEWARE

The metal specifications for stainless steel cookware and bakeware which come in contact with food shall be as follows:

TABLE 12.1 – METAL SPECECIFICATIONS FOR STAINLESS STEEL COOKWARE AND BAKEWARE

ANSI	201	202	301	302	304	316	316L	430†	434*	436*	444
C (max.)	0.15	0.15	0.15	0.15	0.08	0.08	0.03	0.12	0.12	0.12	0.025
Mn (max.)	5.50 - 7.50	7.50 - 10.00	2.00	2.00	2.00	2.00	2.00	1.00	1.00	1.00	1.00
P (max.)	0.060	0.060	0.045	0.045	0.045	0.045	0.045	.040	0.040	.040	.040
S (max.)	0.030	0.030	0.030	0.030	0.030	0.030	0.030	.030	0.030	.030	< 0.015
Si (max.)	1.00	1.00	1.00	1.00	0.75	1.00	1.00	1.00	1.00	1.00	1.00
Cr	16.00 - 18.00	17.00 19.00	16.00 - 18.00	17.00 - 19.00	18.00 - 20.00	16.00 - 18.00	16.00 - 18.00	16.00 - 18.00	16.00 - 18.00	16.00 - 18.00	20.00
Ni	3.50 - 5.50	4.00 - 6.00	6.00 - 8.00	8.00 - 10.00	8.00 - 10.50	10.00 - 14.00	10.00 - 14.00	0.75	-	-	-
Other	0.25 max. N	0.25 max. N	0.10 max. N	0.10 max. N	0.10 max. N	2.0 - 3.0 Mo, 0.10 max. N	2.0-3.0 Mo, 0.10 max. N	-	0.75-1.25 Mo	0.75-1.25 Mo 5x%c min. Nb_Ta(f)	4 x (C+N)+0.15 ≤ Ti ≤ 0.8i

†Note: all 400 series are ferritic steels

*Typically used on exterior of clad materials, not recommended for food contact surfaces.

NOTE: Use of shorthand descriptions of stainless alloys, such as “18/10” or “18/8” are not recommended. Manufacturers should note the appropriate ANSI standard when describing stainless steels. Note that ANSI series specifies ranges of chromium and nickel.

13 TECHNICAL DATA FOR CLAD MATERIALS

13.1 INTRODUCTION

The outstanding properties of aluminum and stainless steel have been well known to the metal working industry for a number of years. Aluminum is most noted for its properties of lightweight, resistance to corrosion, design flexibility, and high thermal or heat transfer. The characteristics of stainless steel, on the other hand, include excellent resistance to corrosion, continued retention of a high lustrous surface, reflectivity, non-reactivity in food contact and the added feature of high strength.

The development and manufacture of clad metals is an old art where the molecular structures of two or more dissimilar metals are joined together to produce a new metal which not only contains the characteristics of each metal, but develops new properties not available in either metals. When combining dissimilar metals, the resulting composite product provides a blend of the desired features or characteristics of both metals, often minimizing the less desirable ones. Clad metals, as it pertains to this application, combines, by means of a metallurgical bond, stainless steel and aluminum into a multiple sheet.

The metallurgical bond between the two metals will withstand normal forming, stamping, and deep drawing operations used in the metal fabricating industries.

Stainless clad on one or both sides of aluminum contains all of the outstanding properties and characteristics of both metals, such as: excellent resistance to corrosion, lightweight to high strength ratio, and excellent thermal conductivity.

13.1.1 STAINLESS STEEL CLAD ALUMINUM 3004 - Stainless steel clad on one side of alloy 3004 aluminum. The Type 304 claddings are approximately .010” or .015" thick. The product has the characteristics of pure aluminum alloy on its aluminum side. When combining both metals the end product has mechanical properties which approximate the following:

Tensile strength (psi) 34,000
Yield strength (psi) 23,000
Elongation (psi) 26%

13.1.2 STAINLESS CLAD ALUMINUM CORE - The 5-ply product combines stainless steel with a core of high conductivity aluminum. The Type 304 stainless steel claddings, .015" thick, are bonded on each side of alloy 3004 aluminum core. The new clad metal contains the outstanding characteristics of both stainless steel and aluminum.

13.1.3 MATERIALS FOR INDUCTION COOKING - Induction heating for cooking depends upon the presence of a Ferro-magnetic material to generate heat. The induction range will not heat aluminum or single-ply stainless steel, glass or other ceramic type cookware, as they are non-magnetic. To overcome this problem, several clad materials have been developed. The list is not totally inclusive of product availability.

13.1.3.1 7-Ply - 7-ply materials have ferritic stainless steel or carbon steel encased in 304 stainless steel and bonded to a core of aluminum with 304 stainless on the other side. These materials have all the advantages of stainless clad aluminum, thermal conductivity, durability and appearance along with the ability to be used on an induction range.

13.1.3.2 5-Ply Stainless Clad Aluminum - 5-ply stainless clad aluminum using a 400 series stainless steel on one side and 304 stainless steel on the other side of an aluminum core can be used on an induction range, but it is difficult to form.

13.1.3.3 3-Ply or Tri-Ply - Carbon steel clad with 304 stainless on both sides.

13.2 PRODUCT SPECIFICATIONS

13.2.1 Stainless Clad Aluminum

13.2.1.1 Thickness - material is available in thicknesses from .050" to .250". Tolerances of the product are the same as those used by aluminum industry.

13.2.1.2 Widths - Minimum width 3". Maximum width 30". Widths greater than 30" considered upon evaluation by supplier.

13.2.1.3 Lengths - Sheet up to 72" long. Blanks from 8 ¾ to 22" diameter available in thicknesses up to .156". Longer lengths and larger diameters considered upon evaluation by supplier.

13.2.1.4 Stainless Steel Thicknesses - Available with .010" and .015" Type 304 cladding. Thicker stainless steel or alternate analysis is available upon request. The .015" is considered standard and most readily available.

13.3 FABRICATION OF STAINLESS CLAD ALUMINUM

13.3.1 DRAW PRESS OPERATION

13.3.1.1 **Tooling** - Stainless clad aluminum can be deep drawn following conventional practices normally used for stainless steel of an equivalent thickness. Conventional tools are used to form parts when using mechanical, hydraulic, or hydro-form presses.

The stainless claddings have a tendency to work harden when formed similar to the characteristics of solid 300 series stainless steel when cold worked. Type 304 stainless steel claddings work harden at a much greater rate than the aluminum backing or core, therefore, this factor must be taken into consideration. When calculating tool radii and/or clearances between the punch and draw ring the cross sectional thickness of the composite must be considered.

The stainless steel claddings are made from an extra high nickel, low work hardening grade of stainless steel, however, the following rules of thumb are used when designing tools:

1. Draw ring radii - six to eight times metal thickness.
2. Punch radii - eight to ten times metal thickness.
3. Set-down radii - two times metal thickness.
4. Clearance between punch and draw ring should be metal thickness plus 5 to 10% maximum per side.

Tools should be designed initially with minimum clearance so that should opening of the clearance be required, it can be readily accomplished without damaging the set of tools.

13.3.1.2 **Percent Reduction** - Ideally reduction in diameter in one press operation should be no greater than 45% of the original diameter of the blank. Forming, using a Hydro-form press, will permit reduction as great as 50% in one draw without failure of the part.

Multiple draw operations would best be made utilizing approximately 10 to 20% reduction for the second draw.

13.3.1.3 **Lubricants** - Lubricants similar to that used for the forming of either stainless steel or aluminum should be used. Generally speaking, lubricants used in fabricating stainless steel are most readily adaptable to the deep drawing of parts. Water soluble lubricants have a tendency to harden, accumulating on the tool and possible causing marking.

13.3.1.4 **Re-Draw Operations** - A low temperature anneal of the aluminum, approximately 700° to 800°F, after the initial drawn shell is made greatly increases the bond strength and thus, additional work can be undertaken if required.

13.3.1.5 Determination of Blank Size - The formula normally used for calculation for the percent reduction is as follows:

% Reduction = 100 ((D - d)/D)

D = Blank diameter
d = Drawn shell diameter

Variations of this formula should be used depending upon the type of flange or set-down required.

Selection of the blank diameter is most critical and can generally be determined using the formula:

Flanged Cup $D = (d_2 + 4d_1h)^{1/2}$

Cup $D = (d_2 + dh)^{1/2}$

d_1 = inside shell diameter
d_2 = Diameter of top flange
h = Height of shell
D = Diameter of original blank

Other factors affecting calculation accuracy are: bottom radii, die clearance, lubricant, blank hold-down pressure, drawing speed, and stress-strain characteristics of the material.

13.3.1.6 Wrinkling - Wrinkling in the side wall of the drawn shell indicates that the punch radii may be generous or the clearance between the punch and draw ring is too great, therefore, adjustments should be made. Also, hold-down pressure will have a bearing upon wrinkling. The greater the hold-down pressure, the greater the possibility of minimizing this condition.

It is preferable to draw shells with flanges as the stainless steel claddings may resist compression, resulting in wrinkling the upper side wall when drawing a straight-sided shell. The flange helps minimize wrinkling in the upper side wall by not restricting the flow of the metal.

13.3.1.7 Draw Speed - Press ram or punch speed of approximately eight to sixteen feet per minute is recommended for drawing shells. Excessive punch speeds may result in variations in work hardening within the piece being fabricated. Also, excessive heat may be generated causing differences in the thermal expansion rates of the two dissimilar metals thus, causing some difficulty.

13.3.2 BLANKING, SHEARING, TRIMMING

Stainless clad aluminum can be cut following any one of the conventional means used in the metals industry such as blanking, shearing trimming and even sawing.

When blanking circles or rectangles from the metal, we suggest that the metal be treated as solid stainless, shearing through approximately 50% to 75% of the thickness and breaking of the remainder due to the pressure and force applied during the shearing operation. Tool clearances for blanking should be kept to a

minimum, initially approximately 4 to 6% of the metal thickness per side. Excessive tool clearance will result in heavy burrs. Lathe trim operations are most successful when drawing shells with or without flanges. It is suggested that the cutting tools penetrate the stainless steel first and then travel through the aluminum, since the stainless steel is quite hard. It may be best served to design the tools for shearing stainless.

When trimming a flange from a drawn shell at least 2 to 3 times the metal thickness should be removed by the trim shear operation.

13.3.3 SPINNING - Spinning or flow turn operations can be carried out on stainless clad aluminum, however, extreme care must be taken to minimize the cold work being applied to either the aluminum or stainless steel. The product will permit spinning or flow turning up to approximately 15% reduction or 15% cold work in one operation. At that point, a low temperature anneal of 750ºF will have a tendency to strengthen the bond and permit further work. Spinning speeds and flow turn speeds should be slightly less than that used for stainless steel. Pressure must be kept at a minimum. However, actual reduction should not exceed 15% without an intermediate anneal of the aluminum.

13.3.4 BRAKE FORMING - Brake forming of stainless clad aluminum can be practiced on a radius of one to two times metal thickness. This radius applies irrespective of whether the stainless steel cladding is on the inside or outside of the bend. Tools must be clean and free of marks, digs, and pick-up.

13.3.5 BULGING - It has been found that bulging rather than nosing is more readily adapted as a forming operation since stainless steel is not readily subjectable to compression operations. It is then better to bulge a part rather than try to compress it into a desired shape. Hydraulic-liquid or rubber-faced tools are most normally used to obtain maximum bulging ability in stainless clad aluminum. Metal should be in the fully annealed condition so that the spread between the tensile and yield strength is at its maximum. Again, annealing of the aluminum can be accomplished, possibly adding to the formability of the part.

13.3.6 DRAWING RECTANGULAR SHAPES - When drawing rectangular shapes it is most advisable to use practices normally acceptable when fabricating stainless steel. Corner radii are generous and the depth in respect to the width is kept to a minimum. Squaring up the side walls is best accomplished in a second operation rather than attempting it in the initial draw. Hold-down is very critical and must be properly applied to the sides and corners to assist in holding out the metal. Radii at the center of the side wall of the rectangular shape can be sharpened to permit better flow of the metals in the adjacent corner or area. As in all drawing operations, thinning of the side wall is objectionable, and the drawing operations should be designed to yield a part that normally thickens in the side wall during the forming operation. Hold-down, radii, lubricant, speeds, and clearance of the punch and draw ring should all be designed into the tooling required to produce a shell with minimum change in metal thickness during the fabrications.

14 TECHNICAL DATA FOR ELECTROLYTIC TINPLATE AND ALUMINIZED STEEL USED FOR COOKWARE & BAKEWARE

SCOPE: This specification applies to electrolytic tin-coated steel sheets and foils used for the manufacture of household cookware and bakeware items. Aluminized steel information follows immediately after tinplate information.

14.1 PHYSICAL CHARACTERISTICS

14.1.1 BASE METAL - The steel portion of the tinplate should be commercial quality, low carbon steel free of defects that affect forming or end-use.

14.1.2 TEMPER - Temper or hardness of the tinplate should be designed as follows:

TABLE 14.1.2

Designation	Rockwell Hardness, 30T
T-1	46 - 52
T-2	50 - 56
T-3	54 - 60
T-4	58 - 64
T-5	62 - 68
T-6	67 - 77

Hardness should normally be measured on the Rockwell 30T scale except for thin gauges (below 75 lbs. per base box) which should be measured on the 15T scale and converted to the 30T scale.

To obtain maximum resistance to deformation in the final product, the hardest material suitable for the manufacturing operation should be specified.

TECHNICAL DATA FOR TINPLATE AND ALUMINIZED STEEL.

14.1.3 THICKNESS - The thickness of tinplate is designated according to pounds per base box. This is related to thickness as follows:

TABLE 14.1.3

Weight in lbs. per Base Box	Theoretical Thickness in Mils.
45	5.0
50	5.5
55	6.1
60	6.6
65	7.2
70	7.7
75	8.3
80	8.8
85	9.4
90	9.9
95	10.5
100	11.0
107	11.8
112	12.3
128	14.1
135	14.9

Most household bakeware is made from electrolytic tinplate weighing from 80 to 135 lbs per base box.

14.1.4 DIMENSIONS

14.1.4.1 Sheets - All material in any one container must be held to the width and length of the sheet sizes ordered and must conform to standard American Iron and Steel Institute (AISI) tolerances.

14.1.4.2 Coils - All coils must be held to the width and weight ordered and must conform to standard AISI tolerances.

14.1.4.3 Gauge - All material of the gauge specified in any one container or coil must be uniform in gauge and conform to standard AISI tolerances.

14.1.4.4 Out of Square - Out of square is the deviation of an end edge from a straight line which is placed at a right angle to the side of the plate, touching one corner and extending to the other side. The amount of deviation is customarily limited to $^{1}/_{16}$" for any end edge measurement up to 42" (inclusive).

14.1.4.5 Camber - Camber is the deviation of a side edge from a straight line touching both ends of the side and is customarily limited to $^{1}/_{16}$" for each 48” of length of fraction thereof.

14.1.5 FORMING - The tinplate shall be capable of being formed or drawn as required without signs of cracking of the base metal or flaking of the tin coating. While actual production is the final test, incoming material may be tested for suitability in this regard by bending 4 x 4" samples through 180º, flat against themselves, both with and against the rolling direction. There should be no cracking of the base metal or flaking of the tin coating observed in the test.

TECHNICAL DATA FOR TINPLATE AND ALUMINIZED STEEL.

14.1.6 WELDABILITY - All material purchased to this specification shall be capable of being welded by a resistance welding method.

14.1.7 GRADING OF TINPLATE

14.1.7.1 Sheets -

14.1.7.1a **Primes** is the grade designation commonly given to tinplate free from imperfections readily observed by the unaided eye.

14.1.7.1b **Seconds** is the grade designations commonly given to tinplate with moderate imperfections in the coating or in the base material.

14.1.7.1c **Un-sorted** (UA) is the designation commonly given when primes and seconds are not segregated.

17.1.7.2 **Coils** - Quality control procedures used in the production of coils are different than for cut sizes. Therefore, more quality control measures are required on the part of the consumer. Also, some defects in coils may not be detected until shearing. Abrasion in coils during shipment is greater than on cut lengths.

The number of base boxes in a coil is computed from the measured length and the specified width. The theoretical weight of a coil is computed by multiplying the number of base boxes in the coil by the specified base weight.

14.2 TIN COATING CHARACTERISTICS

14.2.1 WEIGHT - Tin coating weights are expressed in pounds per base box and represents the total of the tin coating on both sides. The base box is a unit of area of 112 sheets of tinplate 14 x 20” or 31, 360 sq. in. and the tinned area is 62,720 sq. in. Nominal coating weight per base box is .50 lbs minimum. A tin coating weight of 1.0 lbs base box is equivalent to a tin coating thickness of 0.0000606”.

Several methods are available for determine the weight of the tin coating. Details are available in the publication "Tinplate Testing, Chemical and Physical Methods" by W.E. Hoare and S.C. Britton, Tin Research Institute, England. Copies are available from the American office of the Institute located at 492 West Sixth Avenue, Columbus, Ohio.

Methods for determining the coating weights are also described in one of the "Contributions to the Metallurgy of Steel" of the American Iron and Steel Institute published in December 1959 as "Methods for Determination of Coating Weights of Tinplate".

When coating weight tests are conducted, precautions should be taken to insure the samples are representative of the cut sheets or the coil. The producer and the consumer should agree on a suitable sampling procedure.

TECHNICAL DATA FOR TINPLATE AND ALUMINIZED STEEL.

14.2.2 FINISH - This product is normally produced with the tin coating brightened by melting. A matte (un-melted coating) is also available. The tin coating should be uniform, free of rust, blisters and objectionable defects.

14.2.3 TEXTURE - Various matte and embossed textures are available. Standards of acceptable color and finish should be mutually agreed between the producer and consumer.

14.3 PACKAGING

Sheets and coils material purchased to this specification must be protected from injury or loss in shipment. Further protection against weather shall be provided by protecting the containers with waterproof paper and strapping skeleton platforms.

14.3.1 COILS - Coils should be protected with waterproof paper and mounted with the core vertical to two runner skids of platforms with strapping.

Packaging practices shall generally conform to methods shown in latest revision of Simplified Practice. Recommendation R 247: Packaging, Marking and Loading Methods for Steel Products for Domestic Shipments (U.S. Department of Commerce).

Each shipment shall be legibly marked with the purchase order and the manufacturer's name.

14.4 ALUMINIZED STEEL

Recent years have seen an increased use of aluminized steel as a base metal substrate for cookware and bakeware. Aluminized Type 1 coating contains approximately 91% aluminum and 9% silicon that is metallurgically bonded to a low-carbon steel substrate. The hot dip coating process assures a tightly adherent, uniform coating on both sides of the product. A thin alloy layer readily permits normal fabrication practices without incurring significant coating damage. Aluminized Steel Type 1 is supplied in coating weights ranging from T1 13 (0.13 oz/ft 2) to T1 60 (0.60 oz/ft 2). Most common are T1 25 and T1 40. Lighter coating weights (T1 13 or T1 25) are recommended for severe forming applications. Manufacturers should follow supplier recommendations regarding suitable coating types and suitable nonstick coatings when choosing aluminized steel.

Table 14.4.1 - COATING WEIGHTS FOR ALUMINIZED STEEL

TABLE 1 – COATING WEIGHT

Coating Designation	Min. Ctg. Weight oz/ft^2 (Inch-Pound)	Min. Ctg. Weight g/m/^{2} (SI)	Avg. Ctg. Thickness per side (Mils)
T1 13	0.13	40	0.25
T1 25	0.25	76	0.50
T1 40	0.40	122	0.80
T1 60	0.60	183	1.25

Coating Weight is the total of both sides and is determined according to ASTM A 463.
1 oz/Sq. Ft. Coating = .00398 inches coating thickness total both sides.

15 TECHNICAL DATA ON IRON USED FOR COOKWARE AND BAKEWARE

SCOPE: This specification is applicable to non-coated cast iron cookware commonly referred to as "black iron" cookware.

15.1 PHYSICAL CHARACTERISTICS

15.1.1 BASE METAL - The base metal is cast iron in the “as cast” condition. Matrix should be primarily pearlitic, free of significant quantities of cementite and combined carbides.

15.1.2 CHEMICAL COMPOSITION -

TABLE 15.1.2 – CHEMICAL COMPOSITION OF CAST IRON, TYPICALLY

Si	1.8 - 2.4%
P	.17 - .70%
Mn	.50 - .80%
S	.15% max.
Total Carbon	3.5 – 3.8%
Fe	Balance

15.1.3 THICKNESS - Nominal wall sections on cast iron cookware are minimum $^1/_8$” (3.2mm) exclusive of edge building, ornamentation, and handle attachment areas.

15.1.4 DIMENSIONS - Dimensional tolerances are established at ± $^1/_4$" from stated nominal dimensions.

15.1.5 FLATNESS - Flatness on contact surfaces shall be ±$^1/_{16}$" (.0625 or 1.6mm) over the entire length and breadth of the contact surface.

15.1.6 FINISH - Exterior of black iron cookware is normal casting finish obtainable from green sand molding with surface finish of GAR C-9 finish of 420 or smoother. Finish is to be smooth to the touch and free of protrusions, depressions, and sand expansion lines. Exterior parting lines are typically ground flush to surrounding surface.

15.1.7 INTERIOR FINISH - Cookware parting lines should be shot-blasted, rattled and/or ground. Added protective coating or pre-seasoning is necessary to prevent rusting during storage and shipment.

15.1.8 WEIGHT - Weight of cast iron cookware is ± 10% of the nominal weight of each individual vessel.

16 PORCELAIN ENAMEL FINISHES ON ALUMINUM COOKWARE

SCOPE: This specification applies to porcelain enamel exterior finishes which are applied to aluminum cookware.

16.1 REQUIREMENTS

16.1.1 BASIC METAL - The basic metal shall be aluminum or aluminum with the inside side clad with stainless steel, which is capable of being porcelain enameled to meet this specification.

16.1.2 FINISH - The exterior finish shall be porcelain enamel, which is a substantially vitreous, or glassy, inorganic coating bonded to the exterior metal surface by fusion at a temperature above 950ºF (ASTM C286).

16.1.3 SURFACE DURABILITY -

16.1.3.1 Acid solubility shall not be greater than 15 mg per sq. inch when tested according to Section 16.2.1.1.

16.1.3.2 Acid resistance shall be Class "A" or better when tested according to Section 16.2.1.2.

16.1.3.3 Alkali resistance shall be determined in accordance with Section 16.2.2. Loss on this test shall not exceed 15 mg per sq. inch.

16.1.4 COATING THICKNESS - It is important that unnecessary thickness be avoided because the thickness of the porcelain enamel coating is the principal factor affecting chip resistance. It is desirable that film thickness be maintained near 0.002”. However, production of some colors may require greater thicknesses. In no case shall the film thickness exceed 0.004”.

Coating thickness shall be determined in accordance with Section 16.2.3. Thickness shall fall within 0.0015 and 0.004”.

16.1.5 SPALL RESISTANCE - Parts shall be tested in accordance with Section 16.2.4, and evaluation shall be any of the following types of spall that develop within 20 hours to be a basis for rejection:

1. Any spalled area (revealing base metal) extending ⅛” or more in from an edge and more than 1” in length,

2. Any spalled area on the interior surface (not touching an edge) that is more than ⅛” in its maximum dimension, or,

3. More than six visible spall spots per exposed sample.

16.2 TEST METHODS

16.2.1 ACID RESISTANCE - Acid resistance shall be determined in accordance with the following:

16.2.1.1 **ASTM C283** - "Resistance of Porcelain Enameled Utensils to boiling Acid" (Acid Solubility). NOTE: Adaption of apparatus may be made to accommodate samples other than the round coupons specified, or corners may be cut from square samples to fit standard apparatus. Weight loss due to 2.5 hr. exposure to boiling 6% citric acid is determined.

16.2.1.2 **ASTM C282** - "Acid Resistance of Porcelain Enamels (Citric Acid Spot Test)". The surface change due to exposure to 10% citric acid for 15 minutes at room temperature is observed and evaluated.

16.2.2 **ALKALI RESISTANCE** - Alkali resistance shall be determined in accordance with procedures detailed in ASTM C282, "Resistance of Porcelain Enameled Utensils to Boiling Acid". For determination of alkali resistance, a 5% by weight solution of tetra-sodium pyrophosphate will be substituted for the citric acid solution described in the test method. Weight loss due to 2.5 hr. exposure to this solution, boiling, is determined.

16.2.3 **COATING THICKNESS** - Thickness measurements shall be made using an eddy current device such as a Permascope, Dermatron or other instruments designed for measuring non-conductive coatings on non-magnetic bases. Coating thickness shall be determined as the average of a minimum of five readings measured on the surface at random.

16.2.4 **SPALL RESISTANCE** - Spall resistance shall be tested in accordance ASTM 703, "Antimony Trichloride Spall Test for Porcelain Enameled Aluminum". Test specimens will be selected as described in Section 7.1. This test requires exposure for 20 hours to a 1% solution of antimony trichloride. Parts which have been subjected to this test are not acceptable for use.

16.3 PRODUCT SAMPLING AND TESTING

The producer shall test samples representing production lots, sample sections of production parts, and extra parts sufficient to assure conformance with the requirements of this specification. General suggestions for minimum sampling for process control of the various requirements contained in this specification are as follows.

16.3.1 **COLOR AND GLOSS** - Porcelain enameled parts shall be compared with the standards, which have been previously established, at the beginning of each new production set-up and a minimum of one sample per hour shall be checked thereafter. Measurements will not be required except in cases of apparent or obvious deviation from standards.

16.3.2 **SURFACE QUALITY** - All finished parts shall be inspected for objectionable blemishes prior to packing.

16.3.3 **SPALL RESISTANCE** - At least one finished article per color for each four hours of production shall be placed on spall test. A minimum of one piece per 2,500 production parts shall be tested.

16.3.4 **SURFACE DURABILITY** –

16.3.4.1 **Acid Solubility** - New formulas to be used in production will be tested for acid solubility to insure compliance with the provisions of this

specification. Samples having a flat surface shall be specially prepared for this test. Such samples shall be prepared at least once a week.

16.3.4.2 Citric Acid Spot Test - The Citric Acid Spot Test will be performed on samples selected for spall testing prior to their immersion. The spot test area will be ignored when evaluating spall resistance.

16.3.4.3 ALKALI RESISTANCE - Samples for this test shall be cut from the same parts previously prepared for testing for acid solubility. The same considerations for alkali solubility apply as those which were applicable to the acid solubility.

17 PORCELAIN ENAMEL FINISHES ON STEEL OR IRON COOKWARE AND BAKEWARE

SCOPE

This specification provides performance requirements for porcelain enamel interior and exterior multiple (two or more coats on steel or iron) and single-coated finishes applied to steel or iron cookware and bakeware.

17.1 REQUIREMENTS

17.1.1 BASIC METAL - The basic metal shall conform to requirements as outlined in Chapter 10.5 of this manual.

17.1.2 FINISH - The finish shall be porcelain enamel which is a substantially vitreous or glassy, inorganic coating bonded to the metal surface by fusion at a temperature above 1400ºF (ASTM C286).

17.1.3 SURFACE DURABILITY –

17.1.3.1 Acid Solubility - Shall not be greater than 14 mg for multiple coat or 50 mg for single coat items when tested according to Section 17.3.3.1.

17.1.4 COATING THICKNESS - Unnecessary thickness should be avoided. However, production of some colors will require greater thickness than .008” for a single coated utensil or .020” for a multiple coated part.

Coating thickness shall be determined in accordance with Section 17.2.2.

17.1.5 THERMAL SHOCK RESISTANCE - Any multiple-coated porcelain-enameled utensil that can be filled with water to a depth of 1” shall have an average rating of 3 cycles when tested in accordance with Section 17.2.3.

Any single-coated porcelain enamel utensil that can be filled with water to a depth of 1” shall have an average rating of 7 cycles when tested in accordance with Section 17.2.3.

17.2 TEST METHODS

17.2.1 ACID RESISTANCE - Acid resistance shall be determined in accordance with ASTM C283 "Resistance of Porcelain Enameled Utensils to Boiling Acid".

NOTE: Adaptation of apparatus may be made to accommodate samples other than the round coupons specified, or corners may be cut from square samples to fit standard apparatus. Weight loss due to 2 ½ hour exposure to boiling 6% citric acid is determined.

17.2.2 COATING THICKNESS - Thickness measurements shall be made with suitable instrument for measuring non-conductive coatings on magnetic bases. Coating thickness shall be determined as the average of five readings measured on the surface at random.
Note: It is important that the gauge be zeroed using the same material with the same surface finish as the coated material that will be measured.

Identify areas of concern on the vessel where the coating may be too thick or too thin by evaluating the geometry and the application method. Measure the coating thickness in the same area 3 times and average the 3 readings to obtain the material thickness for that area.

17.2.3 THERMAL SHOCK RESISTANCE - Resistance to thermal shock should be determined according to procedures outlined in ASTM C385 "Test for Thermal Shock Resistance of Porcelain Enameled Utensils".

For comparison testing, Repeat the test increasing the oven temperature by 50º F until failure.

According to the Porcelain Enamel Institute, a vessel should be able to withstand a temperature differential of 200ºF.

17.3 PRODUCT SAMPLING AND TESTING

The manufacturer shall test samples representing production lots, and extra parts sufficient to assure conformance with the requirements of this specification.

Suggestions for minimum sampling for process control of the various requirements contained in this specification are as follows.

17.3.1 COLOR AND GLOSS - Porcelain enameled parts shall be compared to porcelain standards, which have been previously established, at the beginning of each new production set-up and a minimum of one sample per run shall be checked thereafter. Obvious or apparent deviation from standards will require immediate corrective measures.

17.3.2 SURFACE QUALITY - All finished parts shall be inspected for objectionable blemishes prior to packing.

17.3.3 SURFACE DURABILITY –

17.3.3.1 Acid Solubility - New formulas to be used in production will be tested for acid solubility to insure compliance with the provisions of this specification. After colors are established, production items they shall be tested at random at least once a week.

17.3.3.2 Hardness - Hardness determinations shall be performed on each new formula, with weekly periodic checks performed thereafter.

17.3.4 THERMAL SHOCK RESISTANCE - Thermal shock resistance standards shall be determined for each new production material. Thereafter, random checks should be conducted.

17.4 SUPPLEMENTARY CONSIDERATIONS

The following, while not part of the specifications, are set forth as an aid to those who specify porcelain enamel finishes.

17.4.1 COLOR - The color and color tolerances should be established prior to commencement of production, and should be based upon porcelain enameled color specimens.

PORCELAIN ENAMEL FINISHES ON STEEL OR IRON

Compliance with color specifications should be determined by visual matching under viewing conditions comparable to those under which the article will be viewed by the user. Color tolerance to be specified should depend upon the specific service requirements and the ease with which the particular color or colors can be controlled in production.

17.4.2 GLOSS - Distinctness-of-image is the main concern on selection of gloss. Visual comparison to gloss of approved samples is desirable, and should be executed by inspectors. The distinctness-of-image gloss test (ASTM C540) may be used to determine allowable variation. The 45º incidence angle - 45º luminous directional reflectance test (ASTM C346) may also be used, but this does not necessarily agree with visual rating. It should be noted that flat samples must be prepared for gloss determination by either of these methods.

17.4.3 SURFACE APPEARANCE - The porcelain enamel shall be free of blemishes which may impair the serviceability or which will detract from the appearance of the utensil. Such processing variations as heavy orange-peel and dry spray will be avoided.

17.4.4 THERMAL SHOCK RESISTANCE - It is desirable to check the thermal shock resistance of porcelain enameled cookware. Some factors affecting this property include enamel thickness, alloy composition and metal preparation.

The test for this property is ASTM C385, "Thermal Shock Resistance of Porcelain Enameled Utensils". This test consists of observing the effect of quenching utensils which have been heated to various temperatures.

Resources include:
Porcelain Enamel Institute
P.O. Box 920220
Norcross, GA 30010
Phone: 770-676-9366
Fax: 770-770 409-7280
www.porcelainenamel.com

17.4.5 Direct Flame Test - Add cooking oil to depth of ¾" (19 mm). Set burner where flame contacts bottom porcelain surface of vessel. Subject to heat until oil reaches 400º F and hold for 30 minutes. Remove from burner and allow to cool. Evaluate bottom porcelain coating. There should be no deterioration of the coating.

17.4.6 Impact Test – Mark area on item to be tested. Mark the item on a flat surface.
17.4.6.1 Cast material - Place sample of hard surface. Secure a tube vertically with the tube 78-3/4 inches (2 meters) from surface of item. Drop 8 oz. (225 g) spherical steel weight to marked area. Inspect for any visible cracking or removal of coating from impact area.
17.4.6.1 Sheet Steel - Follow the procedure described in ASTM B916 and the acceptance criteria.

17.4.7 Dishwasher Testing - Place the test sample in a residential dishwasher. Cycle the dishwasher under normal operating conditions using Cascade with bleach dishwashing detergent and a rinse aid. Set the dishwasher to heat dry. Evaluate the product after every 5 cycles for any change in appearance to a retained control sample.

18 ANODIZED FINISHES ON ALUMINUM COOKWARE AND BAKEWARE

SCOPE

This specification provides performance requirements for hard coat (Grade III) anodized coatings applied to aluminum cookware and bakeware and appearance and color fastness requirements for colored, anodized finishes (Grade II).

18.1 REQUIREMENTS

18.1.1 BASIC METAL - The basic metal shall conform to the requirements for aluminum as outlined in Chapter 11 of this manual. Clad materials with one side being aluminum may also be anodized.

18.1.2 FINISH - Anodizing is a process whereby the natural oxide film of aluminum is increased electro-chemically in order to produce a hard, non-oxidizing finish. Type I finishes are chromic and is not typically used on cookware. Type II finishes may be dyed and sealed to produce a colored surface. Generally these finishes are used as decorative exterior finishes on exterior surfaces and covers. Hardcoat (Type III) anodizing produces a thicker oxide layer, is intended to provide wear and abrasion resistance, and is used on both the interior and exterior of cookware and bakeware.

18.1.3 SEALING OF METAL - After hardcoat anodization, the aluminum surface should be sealed by immersion in boiling de-ionized water, or a nickel fluoride or nickel acetate solution.

18.1.4 SURFACE DURABILITY –

18.1.4.1 Corrosion resistance – Anodized aluminum should be resistant to pitting in normal cooking use. Refer to Section 18.2.1 for corrosion testing procedures.

18.1.4.2 Light fastness resistance (Type II only) - Dyed Type II coatings should not exhibit fading or discoloration when exposed to sunlight. Refer to Section 18.2.2 for test methods.

18.1.4.3 Abrasion resistance- Hardcoat anodized cookware and bakeware should be resistant to scratches and abrasion caused by ordinary home use. Refer to Section 18.2.3 for test methods.

18.1.5 COATING THICKNESS - For Type II coatings, thicknesses may range from 0.00002 to .0010”. Type III hardcoat thickness can range from .0005 to .0045” (0.5 to 4.5 mils). Thicknesses of Type III coatings can be held to close tolerances as little as ± 0.0001”. Abrasion resistance will generally decrease as Type III coating thickness approaches 3 mils. Generally, therefore, thicknesses more than 2 mils do not offer appreciable advantages.

18.2 TEST METHODS

18.2.1 CORROSION RESISTANCE - Subject test item to salt spray test as published in ASTM B 117 for 335 hours and examine per MIL-A-8625F Section 3.7.1.2 for corrosion and pitting.

18.2.2 LIGHT FASTNESS RESISTANCE - Dyed Type II colored coatings should not exhibit fading or discoloration when exposed to ultraviolet radiation for 180 hours in accordance with ASTM G152 and G153.

18.2.3 ABRASION RESISTANCE - Refer to Mil-A-8625F Section 4.5.5. In general, Method 6192.1 of FED-STD-141 using a CS-17 wheel with a 1000 gram load is used to test for abrasion resistance. The wheels revolve on test specimens at 70 RPM for 10,000 cycles. Abrasion resistance is measured and, in general, should not exceed 1.5 mg/1000 cycles.

19 ORGANIC THERMOSET EXTERIOR FINISHES ON COOKWARE AND BAKEWARE

19.1 INTRODUCTION

There are a number of thermoset (baked) exterior finishes for cookware and bakeware. Since the main purpose of the exterior coating is decorative, tests in this section are designed to evaluate the ability of exterior coatings to retain their appearance under use. Coating manufacturers specifications regarding substrate preparation, film thickness, and cure conditions should be followed carefully before any of these tests are performed. The tests in Chapter 19 are useful primarily for manufacturers in choosing coatings to meet applications requirements but are also valid for retailers to discern adherence to claims on labels and packaging.

19.2 COATING PERFORMANCE

19.2.1 RESISTANCE TO DAMAGE - The coating shall be resistant to damage caused by scratches and abrasion encountered in normal household use. The coating shall retain adhesion to the substrate while in use.

19.2.2 RETENTION OF APPEARANCE - The coating shall resist changes in gloss, color and metallic effect, if any, and retain film integrity, (i.e. freedom from softening, blistering or peeling, when exposed to common household foods, normal cooking heat, hot oils and greases, hot water and steam, cleaning detergents and other conditions encountered in ordinary household use).

19.2.3 EASE OF CLEANING - The coating shall resist stains and permit removal of dried or burned food residues with minimum effort without damage to the coating.

19.3 TEST METHODS

19.3.1 RESISTANCE TO DAMAGE

19.3.1.1 Pencil hardness test performed according to ASTM D3363. Minimum hardness recommended is 3H. This test is valid for both manufacturing process verification and retailer testing for quality validation of exterior coatings.

19.3.1.2 Crosshatch adhesion test performed according to ASTM D3359 Method B using scribe lines spaced 1.5 mm apart. Adhesion test to be performed after immersion of test piece in boiling water for 60 minutes. There shall be no loss of adhesion after applying and removing adhesive tape from the scribed area. This test is primarily applied as manufacturing process verification.

19.3.1.3 Evaluation for Solvent Resistance by Solvent Rub Test - ASTM D4752 and NCCA 11-18 - This test method is used to determine the degree of cure of a baked film by the paint film resistance to a specified solvent. The Solvent Rub Test is usually performed using methyl ethyl ketone (MEK) as the solvent. The MEK resistance or degree of cure applies to paint topcoats and primers. This test involves rubbing the surface of a baked film with cheesecloth soaked

with MEK until failure or breakthrough of the film occurs. The type of cheesecloth, the stroke distance, the stroke rate, and approximate applied pressure of the rub are specified. The rubs are counted as a double rub (one rub forward and one rub backward constitutes a double rub). At a minimum, 25 double rubs should not break through the coating. This test is primarily applied as manufacturing process verification.

19.3.2 RETENTION OF APPEARANCE

Tests in section 19.3.2 are quality verification methods useful for coating selection by manufacturer and as retailer verification for exterior thermoset coatings.

19.3.2.1 **Resistance to Heat** - Heat test piece in an oven that is held at temperature 50 degrees F over the rated temperature (but not more than 450 degrees F) monitored by a calibrated temperature device for 8 hours. There shall be no more than a slight change in color due to fading or yellowing, and no more than a slight change in gloss when measured at 60° according to ASTM 523. Change in gloss is the ratio of gloss after exposure to original gloss expressed as a percent of retained gloss or any physical damage as compared to a controlled sample of the same product..

19.3.2.2 **Resistance to Alkaline Detergent Cleaners** - performed by placing ½ of a test piece in 1% by weight Cascade® dishwashing detergent at a temperature of 160° ± 10°F for eight hours. This typically produces a soak solution with a pH of 10, which is strongly basic. Use a pH meter or pH test strips to ascertain that pH of 10 is reached. After exposure the test piece is rinsed with clear tap water and allowed to stand for 16 hours before inspection. There shall be no more than a slight change in color, gloss or metallic effect as compared to the un-soaked side and no loss of film properties as defined by softening, blistering or peeling. This test shall be performed at least once, but may be repeated as often as desired.

19.3.2.3 **Resistance to Hot Water and Steam** – Perform the Crosshatch adhesion test as described in Section 19.3.1.2. The test piece shall be placed for 60 minutes in vigorously boiling water in a way that has part of the test piece above and below the surface of the water. There shall be no change in appearance and no blistering or peeling of the coating above, below or at the water line.

19.3.2.4 **Dishwasher Testing -** Place the test sample in a residential dishwasher. Cycle the dishwasher under normal operating conditions using Cascade with bleach dishwashing detergent and a rinse aid. Set the dishwasher to heat dry. Evaluate the product after every 5 cycles for any change in appearance to a retained control sample.

19.3.2.5 **Resistance to Abrasion** – Heat the test sample to 350ºF. Move the sample back and forth over a 2 inch pattern on a cast iron grate with a weight of 3 lbs. Cycle the unit 1000 times. Perform test 19.3.2.2 with ½ of the test pattern in the solution. Evaluate the sample for any damage. There shall be no change in color, gloss or metallic effect as compared to the un-soaked side and no loss of film properties as defined by softening, blistering or peeling (should the criteria be the cross hatch test?)

ORGANIC THERMOSET EXTERIOR FINISHES

19.3.3 EASE OF CLEANING

Tests in section 19.3.3 are quality verification methods useful for coating selection by manufacturer and as retailer verification for exterior thermoset coatings.

19.3.3.1 **Resistance to Staining** - performed by placing common food products on the surface for up to 24 hours. Thickened products that will not run off the surface are best. Examples are ketchup, mustard, sugar-based barbeque sauce, blueberry pie filling, curry paste made from curry powder,oil and water, vegetable oil and tomato paste. Place stain agents on the surface in a circle 1 ½" in diameter and allow to remain for up to 24 hours. Then wash in warm soapy water, rinse and dry. Inspect coating for staining immediately after washing and after 24 hours. Expectation for performance is no stain present after washing.

19.3.3.2 **Baked-on Stain Test** - Perform test as described in Section 19.3.3.1. Place test piece with stain agents in oven at 350°F for one hour. Remove and cool for 30 minutes. Then wash in warm soapy water, rinse and dry. Evaluate ease of cleaning according to ease and completeness of removal of baked-on stain agents by scrubbing with an Adobe™ pad or a green Scotch Brite™. Expectation for performance is no stain present after washing.

20 SILICONE BAKEWARE

SCOPE

The following represents guidelines for specifying silicone materials meant to be used in bakeware and utensil over-mold or inlay applications for appurtenances such as handles and knobs or utensil grip areas.

20.1 METHOD OF DETERMINING SIZES AND CAPACITIES

See chapter 2 for procedures for determining sizes and capacities and labeling and/or the marking thereof on products.

20.2 DIMENSIONS, TOLERANCES AND TERMINOLOGY

The applicable dimensional tolerances for home bakeware utensils shall be those of Chapter 2.

20.3 SILICONE COMPOSITIONS

In general there are two methods by which silicone is liquid injected molded (LIM) for bakeware and kitchenware: platinum catalyzed and peroxide catalyzed. Manufacturers should consult with silicone suppliers regarding the suitability of the desired process for the item(s) to be molded.

Products produced by either method may require post-mold curing and post-cure cleaning processes to reduce bloom, frost, blush and/or off-gassing that may be objectionable to the end user.

Manufacturers should carefully consult with silicone suppliers regarding recommended procedures to be used for curing and cleaning of product. The finished product delivered to the end user should be free of objectionable odor, especially when heated to the item's recommended limit.

Cured silicone products are generally clear or translucent, but can be colored with inorganic pigments. Hardness values may range from 30 – 70 Shore A, as determined by the product design.

The manufacturer should be certain that the formulation chosen for bakeware will withstand potential oven temperatures recommended for the pan use. Consumer appliance ovens can vary as much as 50°F from set levels. For other uses, the manufacturer should ascertain the expected maximum use temperature and choose a design and formulation that will provide a margin of safety for the end user.

Depending upon the condition of use, the flame resistance of the silicone should be a flame retardant class of UL 94-HB minimum, but may require a higher rating of 94 V-O.

Silicone selected for food contact applications must be compliant with the FDA guidelines in CFR 177.2600.

20.4 FINISHES

Finishes on the production items are a result of the texture of the mold cavity and can range from very smooth and lustrous to fine grained and matte.

SUPPLEMENTARY CONSIDERATIONS

The following, while not a part of the specifications are set forth as an aid to those who design silicone cookware or use silicone in cookware and bakeware appurtenances.

20.4.1 COLOR – The color and color tolerances should be established prior to commencement of production and should be based upon approved attribute standards or with Lab values and a photo spectrometer (colorimeter).

20.4.2 GLOSS – Specular gloss is the main concern on selection of gloss. Visual comparison to gloss of approved samples is desirable and should be executed by inspectors. A Glossmeter capable of conforming to the requirements of The Standard Test Method for Specular Gloss per ASTM D 523 may be used to determine allowable variation.

20.4.3 SURFACE APPEARANCE – The surface of silicone utensils and components of appurtenances shall be free of blemishes which may impair the serviceability or which will detract from the sale-ability of the product. Hazing, bloom, skin delaminating, blisters, color differential, flash, flow marks, orange peel, sink marks, off-register, etc., are some undesirable surface flaws.

20.4.4 METALLIC REINFORCEMENT – Metallic reinforcement for stiffening bakeware items may be desirable, however certain design considerations may be noted, especially when the utensil's use in a microwave oven is anticipated. Metallic reinforcement should offer no sharp edges, close proximity breaks, and it is recommended that metal be insulated sufficiently from incidental contact with the oven's interior walls.

20.4.5 PLASTIC REINFORCEMENT -- Plastic may be used as reinforcement where silicone bakeware may not adequately support weight of foodstuffs. Special attention must be paid to choice of plastic material to ensure suitability with intended temperature, any contact with food, or in the presence of microwave energy**.**

20.4.6 ADHESION TO METAL – Silicone rubber attached to metal components, such as may be encountered with 'soft touch' cookware handles, can present problems with adhesion. If a mechanical bond is not sufficient and a chemical adhesion becomes necessary, a primer may be needed to condition the metallic surface.

20.5 LABELING AND CONSUMER INSTRUCTIONS

It is recommended that manufacturers provide consumer instructions to include the following topics:

- Washing before first use
- Any recommendation on use of release sprays
- Use of supports for transferring full pans if product is not internally reinforced
- Warnings against use on top of stoves or under broilers
- Maximum temperatures allowed for intended applications and warnings to user to use mitts or other protection, particularly for those items placed in an oven. If silicone is used on items exposed to high temperatures in a closed environment (i.e. handle on pan in closed oven or closed grill) the silicone will be too hot to safely handle.
- Precautions against allowing pan to come into contact with oven walls, elements or gas flames.
- Any microwave use instructions as necessary.
- Any precautions for unmolding, use of sharp objects or knives
- Any variations in baking times that may be noted.
- Cleaning instructions, additional to be inserted here.
- Any precautions for the use of cleansers, scouring pads or other cleaning aids which might negatively affect the product's performance
- Retention of instructions for future reference

21 MANUFACTURERS TESTING FOR NONSTICK FINISHES ON COOKWARE AND BAKEWARE

21.1 General Mechanical Testing for Comparison of Coating Adhesion and Durability

Introduction: A number of tests exist to measure adhesion and hardness of nonstick coatings for cookware and bakeware. The demands on Cookware coatings are often (but not always) different than demands on Bakeware coatings. For this reason tests that are pertinent to one class (or chemistry) of coating may not be applicable to the other class. Information gained from many of these tests on cookware may lead to useful results on bakeware items that "cross-over" into cookware applications (such as browning meat on top of stove in an ovenware vessel). The manufacturer will consider such dual applications when selecting non-stick coatings for the specific product market.

Manufacturers should consult with coating suppliers to ascertain the tests necessary to evaluate proper preparation of the coating substrate, proper thickness application of the coating and its proper curing procedure.[1] Coating thickness should be that specified by the coating manufacturer and careful inspection under 10x magnification should be performed to make certain there are no discontinuities in the application.

The following tests and methods in sections 21.1.1 through 21.6.1 are designed to assist manufacturers in evaluating resistance of various coatings to deterioration over a simulated life cycle of the vessel. These tests are mechanical destruction methods to compare process control and chemistry appropriateness for specific uses Application of the following tests to products for pass/fail criteria should respect the limitations of the test method. For instance, whereas one test is determining life of coating until break through to substrate, it would not be used to ascertain stain resistance. Each test is intended to reveal a specific aspect of coating performance.

Nonstick coatings are extremely sensitive to curing temperatures. Cure temperature variations as small as 25ºF can radically affect nonstick coating durability. Manufacturers should therefore ascertain with as much precision as possible that test samples have been properly prepared, coated and cured before the following simulated life cycle tests are performed. Follow coating manufacturer's recommendations regarding adhesion tests, tests for proper curing and other tests that may be required to assure the coating has been properly applied and cured.

Valid and reliable test results are most likely to be achieved when performed with a test sampling of sufficient size to provide a reasonable chance of representing the total population. Manufacturers should exercise caution when interpreting test results of limited sample size. Typically a sample size (N) of 27 is necessary (N being chosen with a suitable randomizing method that assures that **all** members of the population have an equal chance of being selected for testing) in order to achieve a 95% confidence level.

21.1.1 ABRASION RESISTANCE TEST

SCOPE: This test is useful by manufacturers to compare several coatings. No hard and fast numbers for performance expectations are available as rules for pass/fail

The recommended test fixture is illustrated below. The combination of a variable speed motor fixture and a horizontal, linear motor is used for both the abrasion and scratch tests. The abrasion resistance test is performed at room temperature (70º ± 5ºF).

Use a 2" diameter, 3-M # 7447, medium "maroon" Scotch-Brite® Pad affixed to the rotating part of the test fixture. Total weight applied to the pad will be 2 lbs, 11 ounces. Operate the fixture with a 2" linear stroke at 32 cycles ± 2 cycles per minute. Set the pad rotation at 200 rpm.

Illustration 21.1

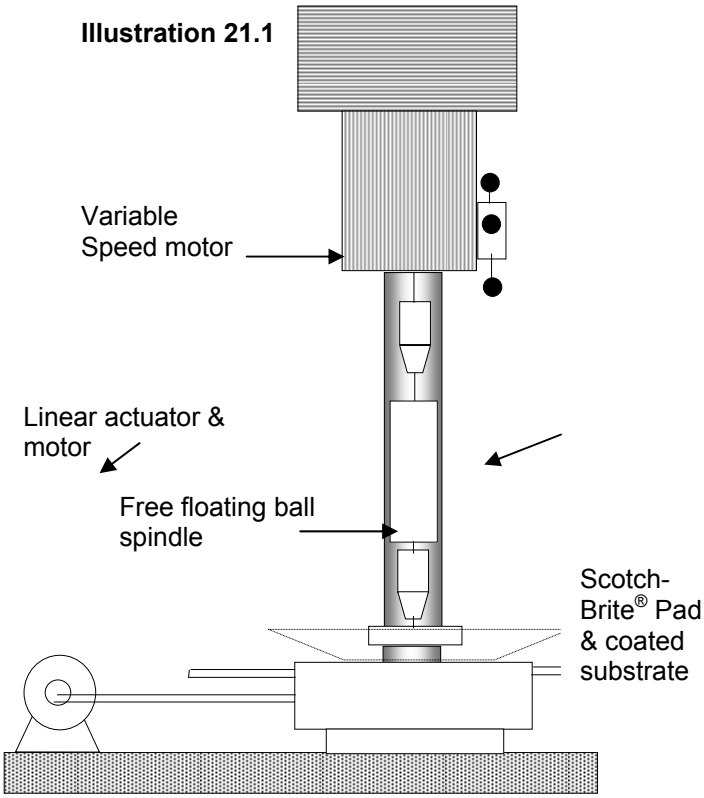

Begin the test and inspect for substrate exposure every 10 minutes for one hour. Note time of the failure to the last ten-minute "pass" inspection. Alternatively, the test may be continued beyond one hour. Change to a new Scotch-Brite pad at the one hour interval and each hour thereafter.

21.1.2 SCRATCH RESISTANCE TEST

SCOPE: This test is useful by manufacturers to compare several coatings. No hard and fast numbers for performance expectations are available as rules for pass/fail.

A square carbide tool, Kennametal™ Catalog SM-297 K9 PCS 10, with a Rockwell hardness of C-89 is used in this test. The tool is mounted in a fixture as illustrated so that the 90º face of the tool is oriented at a 45º angle to the surface of the pan. This test is conducted with the test surface heated and maintained at 400ºF for cookware and 350ºF for bakeware. A weighted load of 0.5 lb is placed on the rotating mechanism, which is operated at a fixture radius of 2" at 9.5 rpm, yielding a rotational speed of 2" per second. Note that the tool is pulled across the surface of the test area, not "plowed". The arm holding the tool should be so constructed as to be adjustable and after the pan reaches test temperature the cutting edge of the tool **must** be adjusted so that it is exactly horizontal to the test pan surface.

The test is operated for one hour, or until substrate is exposed by the scratching of the tool. Inspect the surface at ten-minute intervals. Rotate the tool to a new edge at the end of one hour before continuing the test and each hour thereafter.

ILLUSTRATION 21.1.2 - SCRATCH RESISTANCE TEST

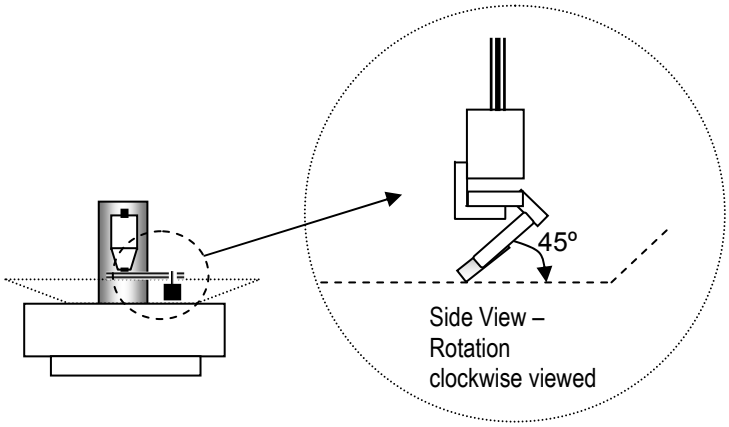

21.1.4 RELEASABILITY AND CLEANABILITY TESTS

SCOPE: The tests described in section 21.1.4 are useful by manufacturers to compare several coatings.

A lengthy process of cooking various foods and then subjectively rating the ease with which the food was released has traditionally evaluated releasability and cleanability of cookware and bakeware. The slip angle and contact angle tests recommended below provide a dependable, objective and repeatable measure of these two components. The contact angle is a measure of how strongly water or n-hexadecane beads on the surface and provides a crucial estimate of how foods are repelled from the nonstick surface. Contact angle is the chemical component of food release, or how readily food is repelled from the surface of the utensil. The physical component of food release is the slip angle. It measures the physical irregularity of the surface. As the slip angle becomes larger, the resultant release is decreased. The slip angle is therefore subtracted from the contact angle to provide a measure of releasability. The test should be performed at room temperature (70º ± 5ºF).

Reinforced non-stick coatings, (where materials are added to the non-stick coating), or where the non-stick coating is applied over a hardened or roughened substrate, by their nature, sacrifice certain releasability in exchange for durability. Where reinforcements are not an integral part of the non-stick coating, the coating may be applied to flat test panels without the reinforcement for contact angle and slip angle measurements since non-flat surfaces may be difficult to measure in the following tests. For those items where the reinforcements are an integral part of the nonstick coating, the cookware or bakeware itself can be used.

21.1.4.1 CONTACT ANGLE MEASUREMENT - This test measures the wettability of a solid surface in terms of the angle that the surface of a sessile drop of distilled water or n-hexadecane makes with the coating surface. The angle may be measured with a model 100 Goniometer (CONTACT: Ramé-Hart, 19 Route 10 East, Ste 11, Succasunna, NJ 07876 www.ramehart.com. An alternative to the Goniometer would be an optical comparator or simply a camera and photocopier capable of enlargement.

Camera and Copier Method
Prepare the cookware or bakeware vessel to be tested by cutting it so that a cross-section of the coating and substrate may be visually observed. Make certain there are no burrs on the edge of the cut surface. Clean the sample thoroughly with isopropyl alcohol. Sample size should be a minimum of 2 inches square.

Use a 50 μl syringe (Fisher Catalog #805) with a square point style # 3 needle. Deposit drops of distilled water of 10μl ± 2 μl size. This should yield a drop with a diameter of about 3 mm.

Position the cross section sample and distilled water bead so that angle of the bead can be observed at the surface. The Goniometer allows direct observation. Alternatively, an enlarged photograph of the bead or an optical comparator can be used to measure the resultant angle θ.

MANUFACTURERS TESTING

ILLUSTRATION 21.4.1 - CONTACT ANGLE MEASUREMENT

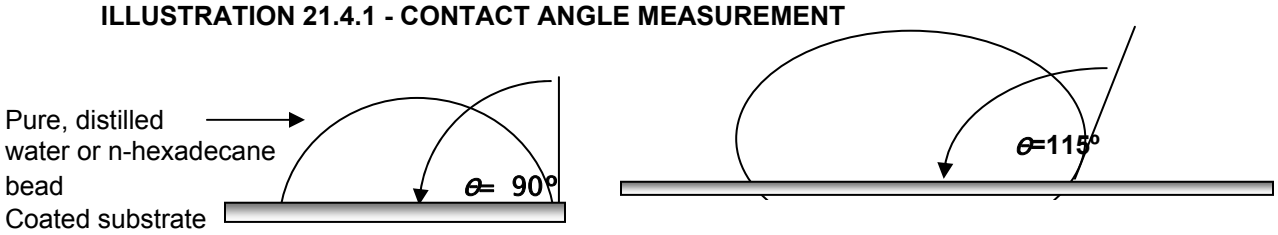

The angle of the tangent to the bead at the point of contact with the surface determines the contact angle. See illustrations above. If the surface was perfectly wet by the water the angle would be 0º. In contrast, if the angle was 180º, the surface would be complete non-wet by the bead. The greater the angle, the better the surface acts as a release surface to cooked food. Record the angle, to the nearest degree on form suggested in Section 21.5. Generally contact angles of about 105º should be found for silicone-polyester based finishes and about 115º for PTFE finishes.

21.1.4.2 COLD SLIP ANGLE TEST - This test measures the "slip" (coefficient of friction) of coatings and produces the other result necessary to objectively evaluate food releasability. This angle is measured with a ¼" thick plywood block 2 x 3.5" covered with five layers of clean #60 cheese cloth on the surface contacting the test vessel. The block is weighted with 576 grams of lead weights not exceeding the block dimensions. The total weight should be 600 grams +/- 30 grams. An adjustable, calibrated inclined plane is also required. For multiple tests, change the cheese cloth after every third pan tested.

ILLUSTRATION 21.4.2 - COLD SLIP ANGLE TEST

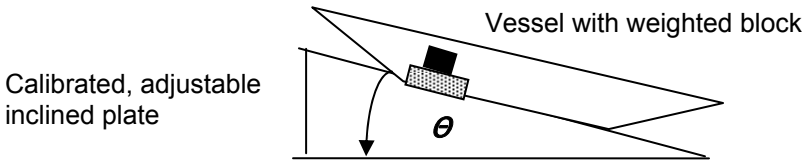

With the vessel secured to the inclined plane, place the weighted block on the vessel test surface as close to the side of the vessel as possible. Slowly raise the inclined plane at a uniform rate of not more than 1º per second. At the exact point at which the block **first** moves (even if only momentary), stop raising the plane and measure the resultant angle θ to the nearest degree. Record on form suggested in Section 21.5. Repeat the test three times and average the resultant angles for the final result. Generally silicone based finishes should produce slip angles of between 4-10º and PTFE finishes 5-15º.

The resultant release value is the contact angle minus the slip angle. A resultant release value of 100 or more is considered ideal; 90-99 will give superior release; a value of 80-90 will require some physical means with which to removed cooked food but should be easily cleaned; a value below 80 typically will be judged unacceptable. Release values may be lower for integerally re-enforced coatings, but exceptional resistance to scratching and abrasion of such coatings may balance such value (i.e., the manufacturer may find slightly lower release values an acceptable trade off for resistance to scratching or abrasion over the life-time of the product).

21.1.5 RESISTANCE TO CHEMICAL ATTACK - Nonstick surfaces must, by their nature, be resistant to attack by commercial dishwashing products and the base or acidic elements of food. The following tests provide a simulation of long-term exposure to foods and cleaning materials.

21.1.5.1- SOAK TEST This test measures resistance to detergents and other alkaline compounds. Make a fully dissolved, .35% by weight, solution of dishwashing powder in ordinary tap water. This produces a soak solution with a pH of 10 which is strongly basic. Use a pH meter or pH test strips to ascertain that pH of 10 is reached. Submerge ½ the test utensil in the solution at 160º ± 10ºF for 16 hours. Rinse the test utensil with running tap water. Evaluate the coating. Failure is denoted by color changes, gloss changes, loss of adhesion or exposure of substrate. Allow the test utensil to stand for 16 ours protected from disurbance at room temperature. Repeat the process for five cycles with fresh test solution each cycle. To pass, a minimum of five cycles should show no failure. Alternatively, and for evaluation purposes, the process may be repeated until failure is noted. Record the number of cycles passed on form suggested in Section 21.5. .

21.1.5.2 RESISTANCE TO SALT AND ACID TEST - This test measures coating resistance to both acid and salt attack. Select five identical pans for this test. Use a 50:50 mixture of tomato sauce and water. To each 29 fluid ounces of this solution add ¼ cup of plain, non-iodinized salt. Mix to uniformity. This should produce 30 fluid ounces of solution. Transfer six ounces of the solution to the five test pans and simmer all pans at a minimum of 230ºF for 2 hours. Allow to stand at room temperature until the pan is examined. One test pan will be examined at the end of each of five 24 hour periods (i.e., vessel # 1 will be examined at the end of day one which is 26 hours following the test starting time, pan # 2 will be examined at the end of day two, which is 24 hours after inspection of pan # 1, etc.).

Empty the sauce mixture from the pan to be examined without using mechanical means. Wash the pan in a standard dishwasher, normal cycle, **without** detergent in order to remove the sauce mixture.

Examine the pan after it is washed and evaluate the condition of the coating (i.e. blisters vs no blisters). Count the number of blisters, if any, contained **within** a 4 ½" diameter circle centered in the bottom of the utensil. Blisters are to be considered within this area if they are **on** the line of the circle. Calculate the square inches of coating thus blistered using the following guidelines:

TABLE 22.1.2.2 - BLISTER COUNT

Blister diameter = <	Quantity	Area	Total area
$^1/_{16}$"		.00306	
$^1/_8$"		.01227	
¼"		.04900	
½"		.19640	

Sum the above blistered area calculations. When the total blistered area reaches or exceeds ½ square inch, the sample pan has "failed" and the test is considered completed. Record the total hours the vessel withstood the mixture to the nearest 24 hour period (rounding up).[2] Alternatively the test may be carried out with more than five pans should an initial run of five pans show no blistering, continuing the waiting period until failure occurs. Enter the information on form suggested in Section 21.5. Staining of surface is not considered in this test.

Measurement of the exposed area may be problematic. A good solution consists of a digital camera, computer and a public domain shareware package known as Scion Image. The program for Mac or PC systems is available for download from several sites online. Essentially, a photo of the pan is downloaded into the computer and the software package can easily measure the exposed area.

21.1.7 SUGGESTED RECORDING FORM FOR NON-STICK TESTING PROCEDURES

Substrate type, thickness, description _____
Product Description _____
Film Thickness _____

Abrasion Test

	Time (min)	Acceptance (Pass/Fail)
New Pad	0	
	10	
	20	
	30	
	40	
	50	
	60	

Scratch Test

	Time (min)	Acceptance (Pass/Fail)
New Carbide edge	0	
	10	
	20	
	30	
	40	
	50	
	60	

Releasability/Cleanability

Contact Angle = A
Slip Angle 1) b1
2) b2
3) b3
Average of b1…b3 = B

A-B = Release Value

Resistance to Chemical Attack

Soak Test

Acceptance (Pass/Fail)

1. 8 hour soak @ 160ºF
   16 hour wait

2. 8 hour soak
   16 hour wait

3. 8 hour soak
   16 hour wait

4. 8 hour soak
   16 hour wait

5. 8 hour soak
   16 hour wait

Acid Test

	Acceptance (Pass/Fail)	Total Blistered Area
Pan 1 (24 hours)		
Pan 2 (48 hours)		

MANUFACTURERS TESTING

Pan 3 (72 hours)
Pan 4 (96 hours)
Pan 5 (120 hours)

Test Summary

Abrasion test – total minutes _____
Scratch test – total minutes _____
Release Value _____
Soak Test – total cycles _____
Acid Test – total hours _____

[1] *For manufactrers who do not wish to set up their own in-house testing, the Association recommends the services of Unified Engineering Inc. 3056 Weber Dr. Aurora IL 60502 630 851-3169. The staff worked closely with the CMA Non-Stick subcommittee of the Standards Committee in the development of these tests. Unified is an independent testing laboratory without financial connection of the Cookware Manufacturers Association.*

21.2 COOKWARE NON-STICK PERFORMANCE FOOD TESTS

Many manufacturers desire testing that replicates cookware performance in a consumer setting. The following tests are designed to replicate such performance and may be used with newly manufactured pans.

22.2.1 EGG TEST (ADAPTED FROM BRITISH STANDARD 7069: 1988) -

Scope: This test is applicable for cookware non-stick coatings only . The pass/fail criteria will only be valid for cookware non-stick formulae. This is a test for the cleanability of a product and not the release properties.

Wash cookware in hot water at a temperature greater than 140°F containing liquid detergent. Heat the cookware on stovetop so that the surface of the base is between 300° and 350°F. Cook a room temperature egg broken into the cookware without additional fat or other lubricant until firmly set and then remove the egg with a plastic or nylon spatula. Record whether the test food was removed intact and if the surface wiped clean. The surface is deemed to be wiped clean if unaided visual examination after wiping reveals no trace of solid material. A “pass” is recorded if there is no trace of solid material after wiping. “Fail” means traces of solid material remain.

21.2.2 ADHESION RESISTANCE TO BURNT MILK TEST -

Scope: This test is applicable for cookware non-stick coatings only. The pass/fail criteria will only be valid for cookware non-stick formulae.

After cleaning the cookware in hot water using dishwashing liquid, rinse with hot water and then cold water and dry the cookware. Pour 1 cup (approximately 237 ml) of whole milk into cookware. Boil the milk on an electric or gas element on medium heat until the water has completely evaporated, and carbonize the milk film until it becomes uniformly brown and fumes are given off. Place the edge of the film under a normal stream of water from a faucet at an angle of 135°. The film should release by itself and entirely under the action of the stream of water. If this does not occur, leave the film to soak in room temperature water for 5 minutes. Pass is recorded if no trace of the film remains; fail if traces remain after soaking. Staining of surface color is not considered in this test.

21.3 BAKEWARE NONSTICK PERFORMANCE FOOD TESTS

In addition to PTFE coatings for bakeware, there are other organic coatings, primarily silicone based, that may be formulated for bakeware to provide product release. These non-PTFE coatings are typically less temperature resistant that PTFE coatings, but may be available at lower costs. These coatings are usually formulated to resist fatty acids found in many meats and sugar-rich recipes for baked goods. The preceding tests in Chapter 21 may be useful in determinations of durability with recommendations from the coating supplier. Additional tests are recommended to fully reveal range of performance. A sample procedure follows:

21.3.1 BARBEQUE CHICKEN ROASTING TEST

21.3.1.1 Equipment and materials –

Chicken thigh, BBQ Sauce, Test pan

21.3.1.2 Procedure –

1. Place one chicken thigh in pan, cover with BBQ sauce.
2. Preheat oven to 350°F.
3. Bake uncovered 45 minutes at 350°F.
3. After removing from oven let sit for 30 min.
5. Remove chicken, wipe pan with paper towel, clean in dishwasher. Repeat 10 cycles.

21.3.1.3 Evaluation -

Rate after 10th cycle for Release, Staining, Cleaning, and Durability.

Ratings:

Release: Pass = meat can easily be removed from pan
Fail = meat sticks to bakeware

Staining: Only slight discoloration of the coating is acceptable
Ratings are None, Slight, and Heavy

Cleaning: Pass = still easy to clean
Fail = difficult to clean, unacceptable build-up of residuals

Durability: Pass = no damage
Fail = visual damage and / or coating removal

21.3.2 BAKED GOODS RELEASE TEST

22.3.2.1 Equipment -

1. Prepackaged baked goods or equivalent Betty Crocker® SuperMoist Yellow Cake Mix (dry weight 517 g).
2. Better Crocker® Fudge Brownie Mix (dry weight 561 g).

3. Electric or gas oven with proven temperature control

4. Table knife and plastic spatula

5. Electric mixer for preparing batter

6. Scale for weighing batter

7. Dishwasher and dishwasher detergent

21.3.2.2 Procedure -

1. Prepare mixes according to instructions

2. Use 9 " round cake pan for cake and 9" square pan (optional 9 x 13") for brownie. Alternatively utilized alternates with appropriate modifications

3. Wash all pans in dishwasher before starting and dry thoroughly

4. Weigh batter in pans to make certain equal amounts are used for each test. Use approximately 475 ± 25g per batch. This is approximately one box of cake mix for two 9" pans, two boxes of brownie mix for three 9" square pans, or one box of mix for one 9" x 13" pan.

5. Bake according to instructions or approximately 30 ± 5 minutes at 350°F (177°C). Allow to cool for 10 minutes prior to evaluation. After each bake cycle, evaluate and wash by hand in warm soapy water and dry. Repeat five times. Wash in dishwasher. Repeat the cycle for a total of 15 pans of cake mix or brownies.

21.3.2.3 Evaluation (following each batch) -

After ten minute cooling period, cut cake into quarters with table knife. Cut brownies into 16 equal squares for 9" square pan or into 20 squares for 9 x 13" pan. Weigh the pan and contents on a digital scale to have a reference weight.

Rating:

5 Invert pan on counter and drop a 2.2 lbs (1kg) weight from 4" (100mm) in the center of the pan. Suggested weight would be ¼" or $^{3}/_{8}$" hex nuts placed in a sewn cloth bag. Weigh the unit and record.

4 If baked good does not fall out completely in 5, invert pan, and drop on counter from height of 12" so that pan hits counter squarely. Weigh the unit and record.

3 If baked good does not fall out completely in 4, run knife around side of pan and drop again from height of 12". Weigh the unit and record.

2 If baked good does not fall out completely in 3, run knife around side of pan and use plastic spatula to ease baked good free of the bottom. Weigh the unit and record.

1 Anything else required to remove the baked good. Weigh the unit and record.

MANUFACTURERS TESTING

Note the amount of the baked good that releases from the sides and bottom, i.e. the percent removed, after the application of each amount of force. At least 75% of the baked good must be released cleanly from coating for a “pass”. Note any residue left on coating. Note any staining after hand washing with soapy water and a blue Scotch Brite™ pad with 25 strokes.

22 RETAILER TESTING FOR NONSTICK FINISHES ON COOKWARE AND BAKEWARE

22.1 General Mechanical Testing for Comparison of Coating Adhesion and Durability

Introduction: A number of tests exist to measure adhesion and hardness of nonstick coatings for cookware and bakeware. The demands on Cookware coatings are often (but not always) different than demands on Bakeware coatings. For this reason tests that are pertinent to one class (or chemistry) of coating may not be applicable to the other class. Information gained from many of these tests on cookware may lead to interesting results on bakeware items that "cross-over" into cookware applications (such as browning meat on top of stove in an ovenware vessel). The manufacturer will consider such dual applications when selecting non-stick coatings for the specific product market.

Manufacturers should consult with coating suppliers to ascertain the tests necessary to evaluate proper preparation of the coating substrate, proper thickness application of the coating and its proper curing procedure.[1] Coating thickness should be that specified by the coating manufacturer and careful inspection under 10x magnification should be performed to make certain there are no discontinuities in the application.

Application of the following tests to products for pass/fail criteria should respect the limitations of the test method. For instance, whereas one test is determining life of coating until break through to substrate, it would not be used to ascertain stain resistance. Each test is intended to reveal a specific aspect of coating performance.

Nonstick coatings are extremely sensitive to curing temperatures. Cure temperature variations as small as 25ºF can radically affect nonstick coating durability. Manufacturers should therefore ascertain with as much precision as possible that test samples have been properly prepared, coated and cured before the following simulated life cycle tests are performed. Follow coating manufacturer's recommendations regarding adhesion tests, tests for proper curing and other tests that may be required to assure the coating has been properly applied and cured.

Valid and reliable test results are most likely to be achieved when performed with a test sampling of sufficient size to provide a reasonable chance of representing the total population. Manufacturers should exercise caution when interpreting test results of limited sample size. Typically a sample size (N) of 27 is necessary (N being chosen with a suitable randomizing method that assures that **all** members of the population have an equal chance of being selected for testing) in order to achieve a 95% confidence level.

22.1.1 RELEASABILITY AND CLEANABILITY TESTS

SCOPE: The tests described in section 22.1.1 reveal standard performance properties useful for retail product qualification for cookware.

A lengthy process of cooking various foods and then subjectively rating the ease with which the food was released has traditionally evaluated releasability and cleanability of cookware and bakeware. The slip angle and contact angle tests recommended below provide a dependable, objective and repeatable measure of these two components. The contact angle is a measure of how strongly water or n-hexadecane beads on the surface and provides a crucial estimate of how foods are repelled from the nonstick surface. Contact angle is the chemical component of food release, or how readily food is repelled from the surface of the utensil. The physical component of food release is the slip angle. It measures the physical irregularity of the surface. As the slip angle becomes larger, the resultant release is decreased. The slip angle is therefore subtracted from the contact angle to provide a measure of releasability. The test should be performed at room temperature (70º ± 5ºF). Reinforced non-stick coatings, (where materials are added to the non-stick coating), or where the non-stick coating is applied over a hardened or roughened substrate, by their nature, sacrifice certain releasability in exchange for durability. (Where reinforcements are not an integral part of the non-stick coating, the coating may be applied to flat test panels without the reinforcement for contact angle and slip angle measurements since non-flat surfaces may be difficult to measure in the following tests. For those items where the reinforcements are an integral part of the nonstick coating, the cookware or bakeware itself can be used.)

22.1.1.1 CONTACT ANGLE MEASUREMENT - This test measures the wettability of a solid surface in terms of the angle that the surface of a sessile drop of distilled water or n-hexadecane makes with the coating surface. The angle may be measured with a model 100 Goniometer (CONTACT: Ramé-Hart, 19 Route 10 East, Ste 11, Succasunna, NJ 07876 www.ramehart.com. An alternative to the Goniometer would be an optical comparator or simply a camera and photocopier capable of enlargement.

Camera and Copier Method
Prepare the cookware or bakeware vessel to be tested by cutting it so that a cross-section of the coating and substrate may be visually observed. Make certain there are no burrs on the edge of the cut surface. Clean the sample thoroughly with isopropyl alcohol. Sample size should be a minimum of 2 inches square.

Use a 50 μl syringe (Fisher Catalog #805) with a square point style # 3 needle. Deposit drops of distilled water of 10μl ± 2 μl size. This should yield a drop with a diameter of about 3 mm.

Position the cross section sample and distilled water bead so that angle of the bead can be observed at the surface. The Goniometer allows direct observation. Alternatively, an enlarged photograph of the bead or an optical comparator can be used to measure the resultant angle Θ.

RETAILERS TESTING

ILLUSTRATION 22.1.1.1 - CONTACT ANGLE MEASUREMENT

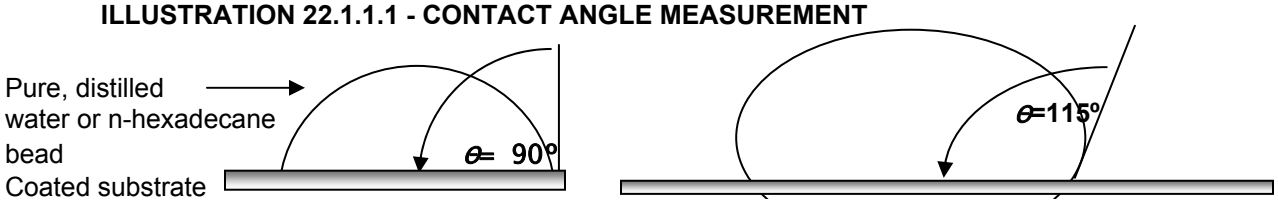

The angle of the tangent to the bead at the point of contact with the surface determines the contact angle. See illustrations above. If the surface was perfectly wet by the water the angle would be 0º. In contrast, if the angle was 180º, the surface would be complete non-wet by the bead. The greater the angle, the better the surface acts as a release surface to cooked food. Record the angle, to the nearest degree on form suggested in Section 21.5. Generally contact angles of about 105º should be found for silicone-polyester based finishes and about 115º for PTFE finishes.

22.1.1.2 COLD SLIP ANGLE TEST - This test measures the "slip" (coefficient of friction) of coatings and produces the other result necessary to objectively evaluate food releasability. This angle is measured with a ¼" thick plywood block 2 x 3.5" covered with five layers of clean #60 cheese cloth on the surface contacting the test vessel. The block is weighted with 576 grams of lead weights not exceeding the block dimensions. The total weight should be 600 grams +/- 30 grams. An adjustable, calibrated inclined plane is also required. For multiple tests, change the cheese cloth after every third pan tested.

ILLUSTRATION 22.1.1.2 - COLD SLIP ANGLE TEST

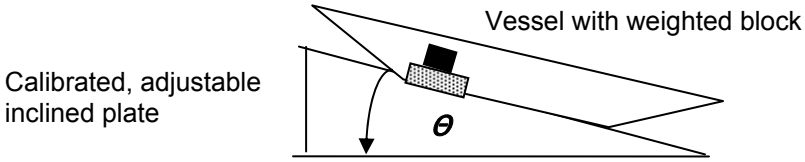

With the vessel secured to the inclined plane, place the weighted block on the vessel test surface as close to the side of the vessel as possible. Slowly raise the inclined plane at a uniform rate of not more than 1º per second. At the exact point at which the block **first** moves (even if only momentary), stop raising the plane and measure the resultant angle θ to the nearest degree. Record on form suggested in Section 21.5. Repeat the test three times and average the resultant angles for the final result. Generally silicone based finishes should produce slip angles of between 4-10º and PTFE finishes 5-15º.

The resultant release value is the contact angle minus the slip angle. A resultant release value of 100 or more is considered ideal; 90-99 will give superior release; a value of 80-90 will require some physical means with which to removed cooked food but should be easily cleaned; a value below 80 typically will be judged unacceptable. Release values may be lower for integerally re-enforced coatings, but exceptional resistance to scratching and abrasion of such coatings may balance such value (i.e., the manufacturer may find slightly lower release values an acceptable trade off for resistance to scratching or abrasion over the life-time of the product).

22.1.2 RESISTANCE TO CHEMICAL ATTACK - Nonstick surfaces must, by their nature, be resistance to attack by commercial dishwashing products and the base or acidic elements of food. The following tests provide a simulation of long-term exposure to foods and cleaning materials.

22.1.2.1 SOAK TEST - This test measures resistance to detergents and other alkaline compounds. Make a fully dissolved, .35% by weight, solution of dishwashing powder in ordinary tap water. This produces a soak solution with a pH of 10 which is strongly basic. Use a pH meter or pH test strips to ascertain that pH of 10 is reached. Submerge ½ the test utensil in the solution at 160º ± 10ºF for 16 hours. Rinse the test utensil with running tap water. Evaluate the coating. Failure is denoted by color changes, gloss changes, loss of adhesion or exposure of substrate. Allow the test utensil to stand for 16 hours protected from disurbance at room temperature. Repeat the process for five cycles with fresh test solution each cycle. To pass, a minimum of five cycles should show no failure. Alternatively, and for evaluation purposes, the process may be repeated until failure is noted. Record the number of cycles passed on form suggested in Section 21.5. .

22.1.2.2 RESISTANCE TO SALT AND ACID TEST - This test measures coating resistance to both acid and salt attack. Select five identical pans for this test. Use a 50:50 mixture of tomato sauce and water. To each 29 fluid ounces of this solution add ¼ cup of plain, non-iodinized salt. Mix to uniformity. This should produce 30 fluid ounces of solution. Transfer six ounces of the solution to the five test pans and simmer all pans at a minimum of 230ºF for 2 hours. Allow to stand at room temperature until the pan is examined. One test pan will be examined at the end of each of five 24 hour periods (i.e., vessel # 1 will be examined at the end of day one which is 26 hours following the test starting time, pan # 2 will be examined at the end of day two, which is 24 hours after inspection of pan # 1, etc.).

Empty the sauce mixture from the pan to be examined without using mechanical means. Wash the pan in a standard dishwasher, normal cycle, **without** detergent in order to remove the sauce mixture.

Examine the pan after it is washed and evaluate the condition of the coating (i.e. blisters vs no blisters). Count the number of blisters, if any, contained **within** a 4 ½" diameter circle centered in the bottom of the utensil. Blisters are to be considered within this area if they are **on** the line of the circle. Calculate the square inches of coating thus blistered using the following guidelines:

TABLE 22.1.2.2 - BLISTER COUNT

Blister diameter = <	Quantity	Area	Total area
$^1/_{16}$"		.00306	
$^1/_8$"		.01227	
¼"		.04900	
½"		.19640	

Sum the above blistered area calculations. When the total blistered area reaches or exceeds ½ square inch, the sample pan has "failed" and the test is considered completed. Record the total hours the vessel withstood the mixture to the nearest 24 hour period (rounding up). Alternatively the test may be carried out with more than five pans should an initial run of five pans show no blistering, continuing the waiting period until failure occurs. Enter the information on form suggested in Section 21.5. Staining of surface is not considered in this test.[2]

22.1.4 SUGGESTED RECORDING FORM FOR NON-STICK TESTING PROCEDURES

Substrate type, thickness, description _____
Product Description _____
Film Thickness _____

Abrasion Test

	Time (min)	Acceptance (Pass/Fail)
New Pad	0	
	10	
	20	
	30	
	40	
	50	
	60	

Scratch Test

	Time (min)	Acceptance (Pass/Fail)
New Carbide edge	0	
	10	
	20	
	30	
	40	
	50	
	60	

Releasability/Cleanability

Contact Angle = A
Slip Angle 1) b1
2) b2
3) b3
Average of b1…b3 = B

A-B = Release Value

Resistance to Chemical Attack

Soak Test

Acceptance (Pass/Fail)

6. 8 hour soak @ 160ºF
   16 hour wait

7. 8 hour soak
   16 hour wait

8. 8 hour soak
   16 hour wait

9. 8 hour soak
   16 hour wait

10. 8 hour soak
    16 hour wait

Acid Test

Acceptance (Pass/Fail) Total Blistered Area

Pan 1 (24 hours)

RETAILERS TESTING

Pan 2 (48 hours)
Pan 3 (72 hours)
Pan 4 (96 hours)
Pan 5 (120 hours)

Test Summary

Abrasion test – total minutes _____
Scratch test – total minutes _____
Release Value _____
Soak Test – total cycles _____
Acid Test – total hours _____

[1] For retailers who do not wish to set up their own in-house testing, the Association recommends the services of Unified Engineering Inc. 3056 Weber Dr. Aurora IL 60502 630 851-3169. The staff worked closely with the CMA Non-Stick subcommittee of the Standards Committee in the development of these tests. Unified is an independent testing laboratory without financial connection of the Cookware Manufacturers Association. Testing may also be done at NSF International

[2] Measurement of the exposed area may be problematic. A good solution consists of a digital camera, computer and a public domain shareware package known as Scion Image. The program for Mac or PC systems is available for download from www.scioncorp.com. Essentially, a photo of the pan is downloaded into the computer and the software package can easily measure the exposed area.

22.2 COOKWARE NON-STICK PERFORMANCE FOOD TESTS

Many manufacturers desire testing that replicates cookware performance in a consumer setting. The following tests are designed to replicate such performance and may be used with newly manufactured pans.

22.2.1 EGG TEST (ADAPTED FROM BRITISH STANDARD 7069: 1988) -

Scope: This test is applicable for cookware non-stick coatings only . The pass/fail criteria will only be valid for cookware non-stick formulae. This is a test for the cleanability of a product and not the release properties.

Wash cookware in hot water at a temperature greater than 140°F containing liquid detergent. Heat the cookware on stovetop so that the surface of the base is between 300° and 350°F. Cook a room temperature egg broken into the cookware without additional fat or other lubricant until firmly set and then remove the egg with a plastic or nylon spatula. Record whether the test food was removed intact and if the surface wiped clean. The surface is deemed to be wiped clean if unaided visual examination after wiping reveals no trace of solid material. A “pass” is recorded if there is no trace of solid material after wiping. “Fail” means traces of solid material remain.

22.2.2 ADHESION RESISTANCE TO BURNT MILK TEST -

Scope: This test is applicable for cookware non-stick coatings only. The pass/fail criteria will only be valid for cookware non-stick formulae.

After cleaning the cookware in hot water using dishwashing liquid, rinse with hot water and then cold water and dry the cookware. Pour 1 cup (approximately 237ml) of whole milk into cookware. Boil the milk on an electric or gas element until the water has completely evaporated, and carbonize the milk film until it becomes uniformly brown and fumes are given off. Place the edge of the film under a normal stream from faucet of water at an angle of 135°. The film should release by itself and entirely under the action of the stream of water. If this does not occur, leave the film to soak in room temperature water for 5 minutes. Pass is recorded if no trace of the film remains; fail if traces remain after soaking. Staining of surface color is not considered in this test.

22.3 BAKEWARE NONSTICK PERFORMANCE FOOD TESTS

In addition to PTFE coatings for bakeware, there are other organic coatings, primarily silicone based, that may be formulated for bakeware to provide product release. These non-PTFE coatings are typically less temperature resistant that PTFE coatings, but may be available at lower costs. These coatings are usually formulated to resist fatty acids found in many meats and sugar-rich recipes for baked goods. A sample procedure follows:

22.3.1 BARBEQUE CHICKEN ROASTING TEST

22.3.1.1 Equipment and materials –

Chicken thigh, BBQ Sauce, Test pan

22.3.1.2 Procedure –

1. Place one chicken thigh in pan, cover with BBQ sauce.
2. Preheat oven to 350°F.
3. Bake uncovered 45 minutes at 350°F.
4. After removing from oven let sit for 30 min.
5. Remove chicken, wipe pan with paper towel, clean in dishwasher. Repeat 10 cycles.

22.3.1.3 Evaluation -

Rate after 10th cycle for Release, Staining, Cleaning, and Durability.

Ratings:

Release: Pass = meat can easily be removed from pan
Fail = meat sticks to bakeware

Staining: Only slight discoloration of the coating is acceptable
Ratings are None, Slight, and Heavy

Cleaning: Pass = still easy to clean
Fail = difficult to clean, unacceptable build-up of residuals

Durability: Pass = no damage
Fail = visual damage and / or coating removal

22.3.2 BAKED GOODS RELEASE TEST

22.3.2.1 Equipment -

1. Prepackaged baked goods or equivalent Betty Crocker® SuperMoist Yellow Cake Mix (dry weight 517 g).
2. Better Crocker® Fudge Brownie Mix (dry weight 561 g).
3. Electric or gas oven with proven temperature control

4. Table knife and plastic spatula

5. Electric mixer for preparing batter

6. Scale for weighing batter

7. Dishwasher and dishwasher detergent

22.3.2.2 Procedure -

1. Prepare mixes according to instructions

2. Use 9 " round cake pan for cake and 9" square pan (optional 9 x 13") for brownie. Alternatively utilized alternates with appropriate modifications

3. Wash all pans in dishwasher before starting and dry thoroughly

4. Weigh batter in pans to make certain equal amounts are used for each test. Use approximately 475 ± 25g per batch. This is approximately one box of cake mix for two 9" pans, two boxes of brownie mix for three 9" square pans, or one box of mix for one 9" x 13" pan.

5. Bake according to instructions or approximately 30 ± 5 minutes at 350°F (177°C). Allow to cool for 10 minutes prior to evaluation. After each bake cycle, evaluate and wash by hand in warm soapy water and dry. Repeat five times. Wash in dishwasher. Repeat the cycle for a total of 15 pans of cake mix or brownies.

22.3.2.3 Evaluation (following each batch) -

After ten minute cooling period, cut cake into quarters with table knife. Cut brownies into 16 equal squares for 9" square pan or into 20 squares for 9 x 13" pan. Weigh the pan and contents on a digital scale to have a reference weight.

Rating:

6 Invert pan on counter and drop a 2.2 lbs (1kg) weight from 4" (100mm) in the center of the pan. Suggested weight would be ¼" or $^{3}/_{8}$" hex nuts placed in a sewn cloth bag. Weigh the unit and record.

5 If baked good does not fall out completely in 5, invert pan, and drop on counter from height of 12" so that pan hits counter squarely. Weigh the unit and record.

4 If baked good does not fall out completely in 4, run knife around side of pan and drop again from height of 12". Weigh the unit and record.

3 If baked good does not fall out completely in 3, run knife around side of pan and use plastic spatula to ease baked good free of the bottom. Weigh the unit and record.

2 Anything else required to remove the baked good. Weigh the unit and record.

Note the amount of the baked good that releases from the sides and bottom, i.e. the percent removed, after the application of each amount

RETAILERS TESTING

of force. At least 75% of the baked good must be released cleanly from coating for a “pass”. Note any residue left on coating. Note any staining after hand washing with soapy water and a blue Scotch Brite™ pad with 25 strokes.

23 Exhibits and References

EXHIBIT A – SUGGESTED UNIVERSAL PICTOGRAPHS/ICONS FOR PRODUCTS AND PRODUCT PACKAGING

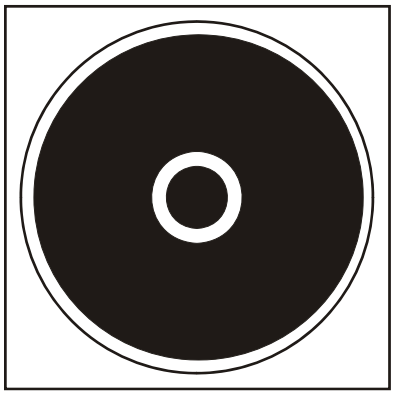

SOLID PLATE

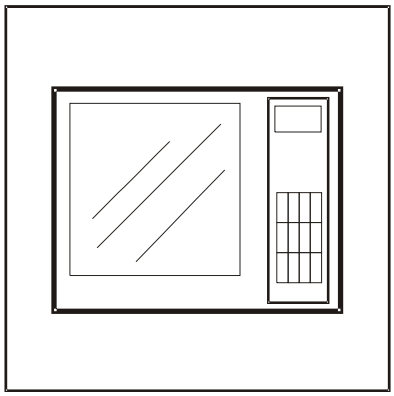

MICROWAVE

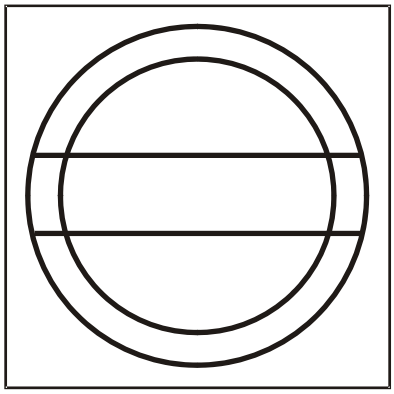

HALOGEN

EXHIBITS AND REFERENCES

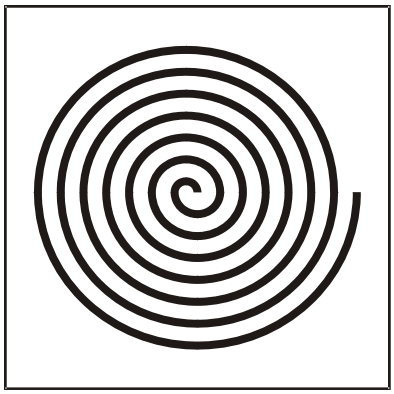

CERAMIC/GLASS TOP

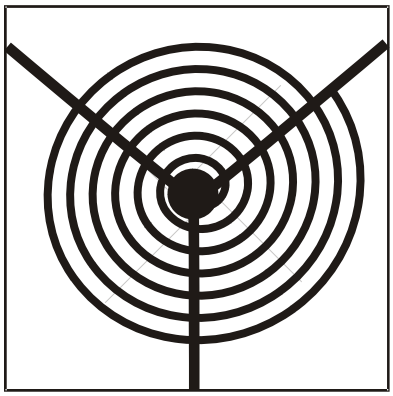

RADIANT RING

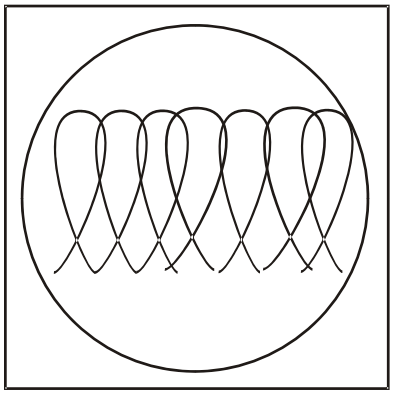

INDUCTION

GAS BURNER

EXHIBITS AND REFERENCES

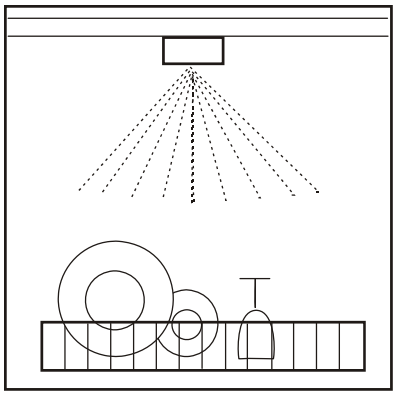

DISHWASHER SAFE

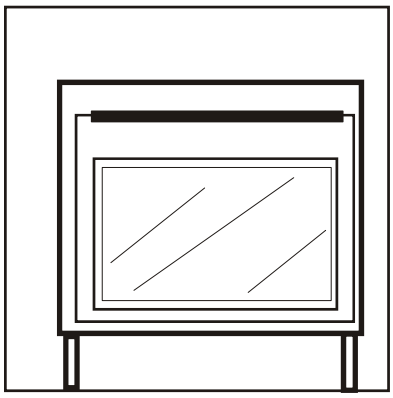

CONVENTIONAL OVEN

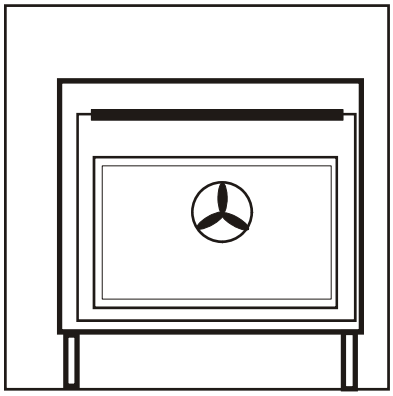

CONVENTIONAL/CONVECTION OVEN

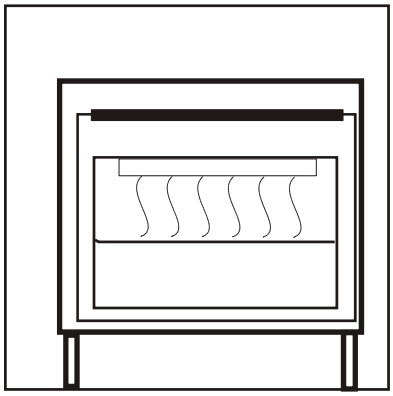

BROILER SAFE

EXHIBITS AND REFERENCES

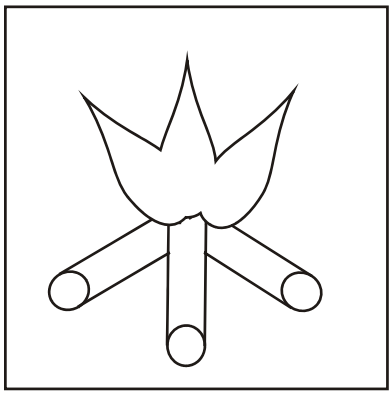

OUTDOOR/GRILL SAFE

EXHIBITS AND REFERENCES

EXHIBIT B - RESERVED

EXHIBIT C - PAGE 1
ASTM Designation: C 738 --94

Designation: C 738 – 94 (Reapproved 1999)

Standard Test Method for Lead and Cadmium Extracted from Glazed Ceramic Surfaces[1]

This standard is issued under the fixed designation C 738; the number immediately following the designation indicates the year of original adoption or, in the case of revision, the year of last revision. A number in parentheses indicates the year of last reapproval. A superscript epsilon (ϵ) indicates an editorial change since the last revision or reapproval.

1. Scope

1.1 This test method covers the precise determination of lead and cadmium extracted by acetic acid from glazed ceramic surfaces. The procedure of extraction may be expected to accelerate the release of lead from the glaze and to serve, therefore, as a severe test that is unlikely to be matched under the actual conditions of usage of such ceramic ware. This test method is specific for lead and cadmium.

1.2 The values stated in SI (metric) units are to be regarded as the standard. The values given in parentheses are for information only.

1.3 *This standard does not purport to address all of the safety concerns, if any, associated with its use. It is the responsibility of the user of this standard to establish appropriate safety and health practices and determine the applicability of regulatory limitations prior to use.*

2. Summary of Test Method

2.1 Lead and cadmium are extracted from the test article by leaching with 4 % acetic acid for 24 h at 20 to 24°C (68 to 75°F) and are measured by flame atomic absorption spectroscopy.

3. Interferences

3.1 There are no interferences when instrumental background correction and light sources specific for lead and cadmium are used.

4. Apparatus

4.1 *Atomic Absorption Spectrometer* equipped with light sources (hollow cathode or electrodeless discharge lamps) specific for lead and cadmium, instrumental background correction, and a 4-in. (102-mm) single slot or Boling burner head. Digital concentration readout may be used. Use air-acetylene flame, instrumental background correction, and operating conditions recommended by instrument manufacturer. Using these conditions, characteristic concentration (concentration that gives 0.0044 absorbance) should be approximately (±20 %) 0.2 and 0.45 ppm for Pb measured at 217.0 and 283.3 nm, respectively. Characteristic concentration should be approximately (±20 %) 0.02 ppm for Cd.

NOTE 1—1 ppm = 1 μg/mL.

4.2 *Lead Lamp*, set at 283.3 or 217.0 nm.

4.3 *Cadmium Lamp*, set at 228.8 nm.

4.4 *Glassware* of chemically resistant borosilicate glass, to make reagents and solutions. Clean by rinsing with dilute nitric acid (10 % by volume) followed by copious quantities of water.

5. Reagents

5.1 *Purity of Reagents*—Reagent grade chemicals shall be used in all tests. Unless otherwise indicated, it is intended that all reagents shall conform to the specifications of the Committee on Analytical Reagents of the American Chemical Society, where such specifications are available.[2] Other grades may be used provided it is first ascertained that the reagent is of sufficiently high purity to permit its use without lessening the accuracy of the determination.

5.2 *Purity of Water*—Unless otherwise indicated, references to water shall be understood to mean distilled water.

5.3 *Acetic Acid (4 % by Volume)*—Mix 1 volume of glacial acetic acid with 24 volumes of water.

5.4 *Detergent Wash*—Use detergent designed for washing household dishes by hand. Mix with lukewarm tap water according to product instructions.

5.5 *Lead Nitrate Solution (1000-ppm Pb)*—Dissolve 1.598 g of lead nitrate ($Pb(NO_3)_2$) in 4 % acetic acid and dilute to 1 L with 4 % acetic acid. Commercially available standard lead solutions may also be used.

5.6 *Hydrochloric Acid (1 % by weight)*—Mix 1 volume of concentrated hydrochloric acid (HCl, sp gr 1.19) with 37 volumes of water.

5.7 *Cadmium Solution (1000-ppm Cd)*—Dissolve 0.9273 g of anhydrous cadmium sulfate in approximately 250 mL of 1 %

[1] This test method is under the jurisdiction of ASTM Committee C-21 on Ceramic Whitewares and Related Products and is the direct responsibility of Subcommittee C21.03 on Test Methods for Whiteware Properties. This test method was developed jointly by the AOAC and ASTM, and adopted official final action by the Association of Official Analytical Chemists (method 973.32 *AOAC Official Methods of Analysis* (1990) 15th ed, AOAC International, Arlington, VA.

Current edition approved July 15, 1994. Published September 1994. Originally published as C 738 – 72. Last previous edition C 738 – 94.

[2] *Reagent Chemicals, American Chemical Society Specifications,* American Chemical Society, Washington, DC. For suggestions on the testing of reagents not listed by the American Chemical Society, see *Analar Standards for Laboratory Chemicals,* BDH Ltd., Poole, Dorset, U.K., and the *United States Pharmacopeia and National Formulary,* U.S. Pharmacopeial Convention, Inc. (USPC), Rockville, MD.

EXHIBIT C - Page 2

HCl (see 5.6) and dilute to 500 mL with 1 % HCl. Commercially available standard cadmium solutions may also be used.

6. Procedure

NOTE 2—Take a method control through entire procedure. Use a laboratory beaker with dimensions similar to ware being tested.

6.1 *Preparation of Sample*—Take, at random, six identical units and the method control vessel and clean with detergent wash. Then rinse with tap water followed by distilled water. Dry, and fill each unit with 4 % acetic acid to within approximately 6 to 7 mm (¼ in.) of overflowing. (Distance shall be measured along the surface of the item tested, not in the vertical direction.) Record the volume of acid required for each unit in the sample (Note 3). Cover each unit with fully opaque glass plate (so that extraction is carried out in total darkness) o prevent evaporation of solution, avoiding contact between cover and surface of leaching solution. (If opaque glass is not available, cover glass with aluminum foil or other material to prevent exposure to light.) Let stand for 24 h at room temperature (20 to 24°C (68 to 75°F)).

NOTE 3—If the sample unit is extremely shallow, or if it has an irregular brim, the analyst should be aware of evaporation of leaching solution. If such a loss is anticipated, record the headspace upon filling the vessel to 6 to 7 mm (¼ in.) of the brim. Adjust to the same headspace with 4 % acetic acid after the 24-h leaching. Stir the solution and proceed with the determination.

6.2 *Preparation of Standards*:

6.2.1 *Lead Standards*—Dilute lead nitrate solution (see 5.5) with acetic acid (see 5.3) to obtain working standards having final concentrations of 0.0-, 1-, 2-, 3-, 5-, and 10-ppm Pb.

6.2.2 *Cadmium Standards*—Dilute cadmium stock solution (see 5.7) with acetic acid (5.3) to obtain working standards having final concentrations of 0.0-, 0.1-, 0.2-, 0.3-, 0.5-, and 1.0-ppm Cd.

6.3 *Determination of Lead by Atomic Absorption*—Stir the leaching solution and remove a portion by pipetting into a clean flask. Use lead lamp (4.2) and concomitantly measure absorbance of lead working standards (6.2.1) and leach solutions. Dilute with 4 % acetic acid if leach solutions contain over 10-ppm Pb. Concentrate leach solutions containing less than 1-ppm Pb by accurately transferring a minimum of 50.0 mL of solution to a 250-mL beaker and evaporating almost to dryness on a steam bath. Add 1 mL of HCl, then evaporate to dryness. Dissolve the residue in 4 % acetic acid by adding exactly 0.1 volume of solution taken for concentration, cover with watch glass, and swirl to complete dissolution. Calculate lead concentration (ppm Pb) of leach solution by comparison to standard curve.

6.4 *Determination of Cadmium by Atomic Absorption*—Proceed as in 6.3 using the cadmium lamp (4.3) and standards (6.2.2). Dilute with 4 % acetic acid if leach solutions contain over 1-ppm Cd. Concentrate leach solutions containing less than 0.1-ppm Cd as in 6.3.

7. Report

7.1 Report the type of units tested, the volume of acid used, and the lead and cadmium leached in parts per million for each unit tested.

NOTE 4—As indicated in Section 1, this procedure covers the extraction and measurement of lead and cadmium from ceramic surfaces. It is general in that it does not specify specific sample unit types. For special end uses, as for example, process control or interlaboratory testing, a specific size and type of sample unit should be used.

8. Precision and Bias

8.1 *Precision*—In an analysis of variance study from eight laboratories, the standard deviation between laboratories was 0.06 mg/L for lead and 0.007 mg/L for cadmium. The within laboratory precision had a standard deviation of 0.04 mg/L for lead and 0.004 mg/L for cadmium. The standard deviation for interaction between laboratories and samples is 0.06 mg/L for lead and 0.010 mg/L for cadmium. Reproducibility is defined as the square root of the sum of the three component variances. The reproducibilities were 0.10 mg/L for lead and 0.013 mg/L for cadmium.

8.2 *Bias*—The bias of this test method is further limited by the ability to obtain representative samples of the statistical universe being sampled. An analysis of large populations (100 to 500) has shown that the lead and cadmium release data conformed to a Pearson III distribution with a coefficient of variation between 30 and 140 %, typically 60 %.[3] Table 1 shows the mean value required in a large lot so that there will be no more than 1 failure in 10 000 for a limit stated in average of six units and for a limit stated for the w orst of six units, for a coefficient of variation of 60 %.

9. Keywords

9.1 cadmium; glazed ceramic surfaces; lead

[3] Moore, C. F., *Transactions*, Journal of British Ceramic Society, Vol 76 (3), 1977, pp. 52–57.

TABLE 1 Mean Value Required in a Large Lot for Failure Rate 1/10 000 with Coefficient of Variation 60 %

Limit (ppm)	Mean of 6	Worst of 6 (Mean of 1)
7	3.21	1.45
5	2.29	1.03
2.5	1.15	0.52
0.7	0.32	0.14
0.5	0.23	0.10
0.25	0.11	0.05

EXHIBIT C - Page 3

DETERMINATION OF LEAD IN POTTERY (or ENAMELWARE)

Apparatus and Reagents

(a) Atomic absorption spectrometer - Perkin-Elmer Model 303 or equivalent, with the following operating conditions: wavelength 218 nm; slit 4; lead hollow cathode lamp; air acetylene burner (0.5 x 110 mm slit) with supply of air at 60 psi (flow meter 9.0) and acetylene at 10 psi (flow meter 9.0) for an aspiration rate of 0.8 ml/minute.

(b) Standard solution: Dissolve any soluble lead salt in 4% acetic acid to a lead concentration l mg/ml. Dilute this standard stock solution with 4% acetic acid to obtain working standards with final concentrations of 10, 20, 30 and 40 µg of lead per ml.

Preparation of Sample (Leaching) Solution

(Individually analyze 6 units of each sample.)

Prior to analysis, wash all vessels with household detergent, followed by a thorough rinse with distilled water. Discard the water and dry the unit; then fill each unit with 4% acetic acid so that the acid comes within 1/4" of overflowing the container. Measure the volume of acid, by difference, as the units are being filled (use graduates or burets calibrated "to deliver"). Cover each unit with a watch glass or other suitable cover, being sure not to allow the cover to come in contact with the acid. Let stand at room temperature for 24 hours.

Determination

Stir sample (leaching) solution and determine absorbance by atomic absorption spectrometry, diluting if required with 4% acetic acid. Determine the absorbance of the standard solutions in a similar fashion. Prepare a standard curve of absorbance versus concentration. Determine the amount of lead from the standard curve. Calculate results as µg of lead/mi of leaching solution.

A sample is considered violative if the average of the six units examined contains 7.0 µg lead/mi of leaching solution or more.

Issued by the Division of Compliance Programs, Bureau of Foods, Food and Drug Administration, June 30, 1971

EXHIBIT C - Page 4

DETERMINATION OF CADMIUM IN POTTERY or (ENAMELWARE)

Apparatus and Reagents

(a) Atomic absorption spectrometer - Perkin-Elmer Model 303 or equivalent, with the following operating conditions: wavelength 228.8 nm; slit 4; cadmium hollow cathode lamp; air acetylene burner (0.5 x 110 mm slit) with supply of air at 60 psi (flow meter 9.0) and acetylene at 10 psi (flow meter 9.0) for an aspiration rate of 0.8 mi/minute.

(b) Standard solution - Dissolve any soluble cadmium salt in 4% acetic acide to a cadmium concentration of 0.1 mg/mi. Dilute this standard stock solution with 4% acetic acid to obtain working standards with final concentrations of 1, 2, 3 and 4.µg of cadmium per ml.

Preparation of Sample (Leaching) Solution

(Individually analyze 6 units of each sample.)

Prior to analysis, wash all vessels with household detergent, followed by a thorough rinse with distilled water. Discard the water and dry the unit; then fill each unit with 4% acetic acid so that the acid comes within 1/4" of overflowing the container. Measure the volume of acid, by difference, as the units are being filled (use graduates or burets calibrated "to deliver"). Cover each unit with a watch glass or other suitable cover, being sure not to allow the cover to come in contact with the acid. Let stand at room temperature for 24 hours.

Determination

Stir sample (leaching) solution and determine absorbance by atomic absorption spectrometry, diluting if required with 4% acetic acid. Determine the absorbance of the standard solutions in a similar fashion. Prepare a standard curve of absorbance versus concentration. Determine the amount of cadmium from the standard curve. Calculate results as µg of cadmium/ml of leaching solution.

A sample is considered violative if the average of the six units examined contains 0.5 µg cadmium/ml of leaching solution or more.

Issued by the Division of Compliance Programs, Bureau of Foods, Food and Drug Administration, June 30,1971.

EXHIBIT D

BS 6748: 1986

British Standard Specification for

Permissible limits of lead and cadmium release from ceramic, glass, glass ceramic and vitreous enamel articles.

1 Scope

This British Standard specifies limits for lead and cadmium, expressed as a concentration of the elements, released from ceramic, glass, glass ceramic and vitreous enamel articles intended for use in contact with foodstuffs, when the article is subjected to a specified method of test.

NOTE. The titles of the publications referred to in this standard are listed on the inside back cover.

2 Definitions

For the purposes of this British Standard the following definitions apply.

2.1 ceramic ware. Articles manufactured from a mixture of inorganic materials with a generally high argillaceous or silicate content to which small quantities of organic materials may have been added. These articles are first shaped and the shape thus obtained is permanently fixed by firing. They may be glazed, enamelled and/or decorated.

2.2 glassware. Articles manufactured from soda-lime-silica, borosilicate or lead crystal glass, or from glass ceramic.

2.3 vitreous enamel ware. Articles manufactured with a glazed surface finish produced by the application of a powdered inorganic glass, dry or suspended in water, to metal parts and its subsequent fusion.

2.4 surface area. The surface area of an article (in category 1), which can be filled, is the area of the surface of the meniscus formed by the free liquid surface when the article is filled to within 1 mm of the overflow point, measured from the upper rim of the article. For articles with a flat or slightly sloping rim this distance is within 6 mm of the extreme edge of the rim.

In all other cases the surface area is that calculated from the area(s) of the article's surface which will come into contact with foodstuffs in normal use.

2.5 volume. The volume of an article (in categories 2 and 3) is the capacity obtained when the article is filled to within 1 mm of the overflow point.

3 Classification

Three categories of article are specified, determined by the size, shape and/or purpose of the article with the intention of defining the maximum levels of metal release from the article's surface.

Category 1. Articles which cannot be filled and articles which can be filled, the internal depth of which, measured from the lowest point to the horizontal plane passing through the upper rim, does not exceed 25 mm. This includes those articles known as flatware.

Category 2. Articles, not in categories 1 or 3, which can be filled. This includes those articles known as holloware.

Category 3. Packaging and storage vessels having a capacity of more than 3 L and cooking ware, i.e. items designed and sold for use in the hot preparation of food or beverages. In a set of articles termed 'oven-to-tableware' there will be items which are not intended for use in the actual cooking process; such items are of category 1 or 2, as defined therein.

4 Lead and cadmium release

4.1 General

When tested in accordance with the method given in appendix A any article of ceramic ware, glassware, glass ceramic ware or vitreous enamel ware shall not release into the extracting solution a quantity of lead or cadmium, calculated as the element, exceeding that given in 4.2 for the appropriate category of article.

Where an article is fitted with a lid of the same material, the vessel and lid shall be tested separately and the quantities of lead and cadmium obtained summed to provide the values for compliance with 4.2. For the purposes of this requirement the summed values shall be considered as applying to the surface area or volume of the vessel only.

4.2 Limits

The maximum limits of lead (Pb) and cadmium (Cd) release shall be as follows.

Category 1 articles: 0.8 mg of Pb/0.07 mg of Cd, per square decimetre of surface area;

Category 2 articles: 4.0 mg of Pb/0.3 mg of Cd, per litre of volume;

Category 3 articles: 1.5 mg of Pb/0.1 mg of Cd, per litre of volume.

4.3 Sampling provision

Where an article of ceramic ware, glassware, glass ceramic ware or vitreous enamel ware releases a quantity of lead and/or cadmium into the extracting solution at a level exceeding that given in 4.2, by not more than 50 %, at least three further articles shall be tested and the average quantity of lead and/or cadmium per article determined.

The average quantity so determined shall not exceed that given in 4.2 for a single article and no one sample shall exceed the value by more than 50 %.

Appendix

Appendix A. Method for determination of metal release

A.1 Reagents

A.1.1 General. All reagents shall be of recognized analytical quality.

A.1.2 *Water*, complying with the requirements of BS 3978.

A.1.3 *Acetic acid* (CH_3COOH), glacial.

A.1.4 *Acetic acid solution* (4 % *V/V*). To 500 mL of water (**A.1.2**) add 40 mL of glacial acetic acid (**A.1.3**) and make up to 1 L. Freshly prepare the solution prior to use in sufficient quantity to enable the whole of any group of tests and analyses to be completed.

A.1.5 *Standard metal solutions*

A.1.5.1 1000 ± 1 mg Pb in 1 L of 4 % *V/V* acetic acid (**A.1.4**).

A.1.5.2 500 ± 0.5 mg Cd in 1 L of 4 % *V/V* acetic acid (**A.1.4**).

NOTE. Commercially available standard solutions for atomic absorption spectroscopy may be used provided that the concentrations of such solutions are known to an equivalent accuracy.

A.2 Apparatus

A.2.1 *Atomic absorption spectrophotometer*, with a detection limit equal to or better than 0.2 mg/L Pb (in 4 % *V/V* acetic acid) and 0.02 mg/L Cd (in 4 % *V/V* acetic acid).

NOTE. The detection limit is the concentration of the element which gives a signal equal to four times the standard deviation of the background noise level of the instrument.

A.2.2 *Laboratory glassware.* Volumetric glassware of class B, or better, accuracy as specified in BS 700, BS 846 or BS 1792, as appropriate. General laboratory glassware of borosilicate glass incapable of releasing detectable levels of lead or cadmium into 4 % acetic acid during the test procedure.

A.3 Preparation of samples

Wash the sample in an aqueous solution at 40 ± 5 °C containing 1 mL/L of domestic liquid detergent. Rinse the sample thoroughly with water (**A.1.2**) and allow to drain, then wipe dry with clean filter paper. Do not use any sample which shows residual staining.

If the sample possesses an area of its surface, which is not intended to come into contact with foodstuffs in normal use, other than the interior of any lid, cover this area after the initial washing and drying with a protective coating which will withstand the effect of 4 % *V/V* acetic acid and which will not release any detectable levels of Pb or Cd into 4 % *V/V* acetic acid during the test procedure.

NOTE. High melting point paraffin wax is a suitable coating.

Do not handle the surface to be tested after it has been prepared.

A.4 Procedure

A.4.1 Condition the sample to 22 ± 2 °C. For category 1 articles, determine and record the surface area of the article.

A.4.2 Fill the conditioned sample with 4 % *V/V* acetic acid solution (**A.1.4**) at 22 ± 2 °C to a level no more than 1 mm from the overflow point, measured from the upper rim of the sample, and to no more than 6 mm from the extreme edge of a sample with a flat or sloping rim. Samples which cannot be filled should be completely immersed in the minimum amount of 4 % *V/V* acetic acid.

Record the quantity of 4 % *V/V* acetic acid required or used to an accuracy of ± 2 %. Record the quantities separately where an item with a lid is tested.

A.4.3 Where tests are for both cadmium and lead, cover the sample and ensure that throughout the test procedure the surface under test is kept in complete darkness.

NOTE 1. If lead only is to be determined the test may be conducted in normal lighting.

Maintain the filled, or immersed, samples at 22 ± 2 °C for 24 ± 0.5 h under conditions which preclude evaporative losses.

NOTE 2. Plastic trays with close fitting lids are suitable containers to prevent evaporative losses from the test vessels.

A.4.4 Homogenize the extract solution, by stirring or other method, without loss of solution or abrasion of the surface being tested and withdraw a portion for the determination of lead and/or cadmium.

NOTE. A method of homogenizing the extraction solution is to remove a quantity by pipette and allow it to run back into, or onto, the sample several times, avoiding dilution or evaporation loss in the process.

A.5 Analysis

A.5.1 Set up the atomic absorption spectrophotometer having regard to the manufacturer's instructions using wavelengths of 217.0 nm for lead determination and 228.8 nm for cadmium determination with appropriate correction for background absorption effects.

NOTE. Where appropriate, a wavelength of 283 nm may be used for the analytical confirmation of lead.

A.5.2 Aspirate water (**A.1.2**) and adjust the zero. Aspirate a range of dilute standard metal solutions prepared by dilution of the standard metal solutions (**A.1.5**) with 4% *V/V* acetic acid solution. Aspirate water (**A.1.2**) after each standard metal solution (**A.1.5**) and record the absorbance values obtained.

A.5.3 Aspirate water (**A.1.2**) and then 4 % *V/V* acetic acid (**A.1.4**) and measure the absorbance value. Aspirate the sample extracts (see **A.4.4**), accurately diluted where appropriate, interspersed with water (**A.1.2**). Measure the absorbance values of the sample extracts or accurately diluted sample extracts.

A.5.4 To check for instrument drift, aspirate dilute standard metal solutions interspersed with sample extracts and with water (**A.1.2**).

Provided that the absorbance values of the dilute standard metal solutions and of the 4 % *V/V* acetic acid solution (A.1.4) indicate minimal drift, the results may be calculated by the bracketing technique (see A.6), from a manually prepared calibration curve or by using the calibration facilities of the instrument.

A.6 Calculation of results by the bracketing technique

The lead or cadmium content, C_0, expressed in mg/L of the extraction solution, is given by the equation:

$$C_0 = \left[\left\{ \left(\frac{A_0 - A_1}{A_2 - A_1} \right) \left(C_2 - C_1 \right) \right\} + C_1 \right] d$$

where

A_0 is the absorbance of the lead or cadmium in the sample extract;

A_1 is the absorbance of the lead or cadmium in the lower bracketing solution;

A_2 is the absorbance of the lead or cadmium in the upper bracketing solution;

C_1 is the lead or cadmium content of the lower bracketing solution (in mg/L);

C_2 is the lead or cadmium content of the upper bracketing solution (in mg/L);

d is the factor by which the sample was diluted.

NOTE. The lower and upper bracketing solutions should be chosen to have absorbance values close to that of the sample extract or diluted sample extract.

Relate the values so determined to the total quantity(ies) of solution recorded in A.4.2 and, for category 1 articles, to the surface area of the article.

A.7 Test report

The test report shall contain:

(a) the nature of the article under test;

(b) the surface area or volume, as appropriate, of the article;

(c) the amount of lead and/or cadmium in the total quantity(ies) of extracting solution(s) expressed as milligrams of Pb or Cd per square decimetre of surface area for category 1 articles or milligrams of Pb or Cd per litre of volume for category 2 and 3 articles.

Exhibit E

Suggested Silicone Cleanability Food Test

Square Cake pans of different formulations/manufacturers

Place 5 strips of bacon of the same weight per cake pan.
Freeze for 2 hours.
Microwave immediately on high for 7 ½ minutes or until crispy. Hold bacon at the end ½ inch in, bacon should not droop.
Cool for 5 min and invert pan.
Note the release ability.
Dab excess grease off the cake pan.
Wait 1 hour and place the cake pan in the bottom rack of the dishwasher, set on pot scrub cycle and use Cascade dishwashing powder soap.
Inspect for damage or cracks
Repeat this process 10 total times per pan

Muffin Pans of different formulations/manufacturers

Each muffin pan contains 6 holders.
Add 1 egg each to two of the holders.
Add 2 Tbls of white granulated sugar each to two of the holders
Add 2 Tbls of milk each to two of the holders.
Microwave on high for 5 min or until the egg is cooked hard, sugar is melted, or the milk is burnt. Whatever happens first.
Invert pan and note the release ability
Place on bottom rack of the dishwasher, set on pot scrub cycle and use Cascade dishwashing powder soap.
Inspect for damage or cracks.
Repeat this process 10 total times per pan

Round/Tube Cake Pans of different formulations/manufacturers

Bake a cake in each pan according to the recipe directions
Allow to cool and invert pan
Note the release ability
Hand wash and dry
Make Jello® following the directions on the box
Invert pan and note the release ability
Hand wash and dry
Perform CMA 21.4.4 Soak Test. See standards for directions
Repeat Cake and Jello Tests
Compare results

Square Cake pans of different formulations/manufacturers

Tomato test (resistance to salt and acid test)

Use CMA 21.4.5 tomato recipe-Use a 50:50 mixture of tomato sauce and water. To each 29 fluid ounces of this solution add ¼ cup of plain, non-iodized salt. Mix to uniformity. This should produce 30 fluid ounces of solution.

Add 6 ounces to each pan and bake at 230 F for 2 hours.
Store in the refrigerator over night
Place back into the oven and bake at 230 F for 2 hours
Empty, rinse with water, and inspect for staining and degradation
Repeat this cycle 4 more times a total of 5 cycles
After the 5th cycle place in the dishwasher, use the pot scub setting, and Cascade dishwashing powder detergent.

Resistance to Soap

Place 2 Tbls of liquid dishwashing soap on the silicone surface for 48 hours
Rinse and inspect for stains and degradation
Use several different manufacturers of soap

Cycle times may vary until tests are completed.

EXHIBITS AND REFERENCES